ADVERTISEMENT FOR BIDS

Sealed proposals will be received in the Office of the Procurement Manager, Greenville Utilities Commission, 401 S. Greene Street, Greenville, North Carolina 27834 until 2:00 pm (EST) on August 25, 2026 and immediately thereafter publicly opened and read for the furnishing of Galvanized Tubular Steel Structures.

Instructions for submitting bids and complete specifications will be available in the Office of the Procurement Manager, Greenville Utilities Commission, 401 S. Greene Street, Greenville, North Carolina during regular office hours, which are 8:30AM – 5:00PM Monday through Friday.

Greenville Utilities Commission reserves the right to reject any or all bids. **Late bids will not be considered.**

SECTION I

GENERAL INSTRUCTIONS FOR FORMAL BIDS

RELATED TO THE PURCHASE OF APPARATUS, SUPPLIES, MATERIALS, AND EQUIPMENT

1. NOTICE TO BIDDERS

Sealed bids, subject to the conditions made a part hereof, will be received in the Office of the Procurement Manager, Greenville Utilities Commission, 401 S. Greene Street, Greenville, North Carolina 27834 until 2:00 pm (EST) on August 25, 2026, the day of opening. Bids submitted in a fax or e-mail in response to this Invitation for Bids **will not be acceptable.**

2. STANDARD FORMS REQUIRED

Each bidder must submit a proposal on the enclosed bid forms. **The bid must be signed by an authorized official of the firm. Return only the attached Proposal Form. Do not return the Advertisement for Bids, Instructions to Bidders or Specifications.**

3. PREPARATION OF BID

Bids must be in sealed envelopes clearly marked on the outside with the name of the bid and the bid opening date and time. Bid shall be addressed to PROCUREMENT MANAGER, GREENVILLE UTILITIES COMMISSION, 401 S. GREENE STREET, GREENVILLE, NORTH CAROLINA 27834.

4. TIME FOR OPENING BIDS

Bids will be opened promptly and read at the hour and on the date set forth in the advertisement in the Office of the Procurement Manager, Greenville Utilities Main Office, 401 S. Greene Street, Greenville, North Carolina. Bidders or their authorized agents are invited to be present.

5. BID SECURITY

Each Proposal shall be accompanied by cash, cashier's check, or certified check drawn on a bank insured with the Federal Deposit Insurance Corporation or the Savings Association Insurance Fund, payable to the Owner, in an amount not less than five percent (5%) of the total bid as a guarantee that a Purchase Order, if awarded, will be accepted. In lieu thereof, a Bid Bond may be submitted by the Bidder in an amount not less than five percent (5%) of the total bid.

6. NC SALES TAX

Do **not** include NC sales taxes in bid figure; however, Greenville Utilities Commission (GUC) does pay sales tax. Sales tax should be added to the invoice as a separate item.

7. FEDERAL EXCISE TAX

GUC is exempt from Federal Excise Tax and will issue a Federal Exemption Certificate upon request to the successful bidder.

8. EXCEPTIONS TO BE CLEARLY STATED

If bid is not in strict accordance with Section II, "Specifications," bidder must list or note all exceptions **on the Request for Proposal Form**, otherwise, it is fully understood that the successful bidder will furnish equipment and/or materials exactly as specified. GUC reserves the right to accept or reject bids with noted minor deviations from specifications and to determine the lowest responsible, responsive bid from the standpoint of quality, performance, and price.

9. EVALUATION AND AWARD OF BIDS

GUC reserves the right to reject any and all bids, to waive any and all informalities, and to disregard all nonconforming or conditional bids or counter proposals. In evaluating bids, GUC shall consider whether the bids comply with the prescribed requirements, plus all alternates or options requested. Delivery and price per pound of steel are the primary determinants in the evaluation of all bids. References will also be used in the evaluation process. GUC reserves the right to include or exclude any option or alternative in GUC's opinion is in GUC's best interests. If a bid is to be awarded, it will be awarded to the lowest responsible, responsive bidder whose evaluation by GUC indicates that the award will be in GUC's best interests. Only firm prices will be considered for award of this bid.

10. PROMPT PAYMENT DISCOUNTS

Bidders are urged to compute all discounts into the price offered. If a prompt payment discount is offered, it may be considered in the award of the contract.

11. NUMERICAL ERRORS

In the case of a discrepancy between a unit price and the extension (the unit price multiplied by the number of units), the unit price governs. In the case where numerical bids are stated both in numbers and in words, the words govern.

12. BID WITHDRAWAL

A bidder must notify GUC in writing of its request to withdraw a bid within seventy-two (72) hours after the bid opening, not including Saturdays, Sundays, or holidays. In order to justify withdrawal, the bidder must demonstrate that a substantial error exists and that the bid was submitted in good faith.

13. DELIVERY TIME

Delivery time is to be stated and will be considered in the evaluation of bids. Failure by the successful bidder to meet quoted delivery shall be interpreted as non-compliance with these specifications and may be deemed sufficient cause for removal of the manufacturer and/or distributor from our lists as acceptable manufacturers or bidders.

14. DELIVERY

Shipments will be made only upon individual releases from a blanket purchase order issued by GUC in accordance with GUC's current needs. Time is of the essence with respect to all deliveries under this Agreement. Delivery of all equipment, materials, or supplies shall be made Free on Board (FOB) GUC Warehouse, 701 Utility Way, Greenville, North Carolina 27834, unless otherwise specified. **Transport by rail or truck are the only acceptable delivery methods from the factory to GUC**. The agreed price for such equipment, materials, or supplies shall include all costs of delivery and ownership, and risks of loss shall not be transferred from Provider to GUC until express written acceptance of delivery and inspection by GUC. Delivery hours are between 8:00 AM and 4:30 PM Tuesday-Thursday only. **GUC's purchase order number is to be shown on the packing slip or any related documents.** GUC reserves the right to refuse or return any delivery with no purchase order number or which is damaged. GUC will not be charged a restocking fee for any delivery which is refused or returned.

15. CONTRACT PERIOD

NA

16. MANUFACTURER

Bidder is to specify the manufacturer of items being quoted if applicable.

17. QUANTITIES

Quantities specified are only estimates of GUC's requirements. GUC reserves the right to purchase more or less than the stated quantities at prices indicated in the submitted Proposal Form based on our actual needs.

18. CONTACT INFORMATION

Questions regarding this bid request should be directed to Cleve Haddock, Lifetime CLGPO, Procurement Manager, at (252) 551-1533, haddocgc@guc.com. **All questions regarding this bid must be received by or before 5:00 pm (EST) on July 28, 2026.**

19. TERMS AND CONDITIONS

The attached Terms and Conditions apply to all purchases made by Greenville Utilities Commission (GUC) and must be considered as part of the bid proposal.

SECTION II

GREENVILLE UTILITIES COMMISSION

SPECIFICATIONS FOR GALVANIZED TUBULAR STEEL STRUCTURES

AUGUST 25, 2026

STEEL SINGLE POLES AND CAISSONS

1. SCOPE

This specification covers the design, materials, welding, inspection, protective coatings, drawings and delivery of steel transmission single pole structures. The proposal submitted by the manufacturer shall include field bolts, locknuts, vangs, attachment provisions for arms and/or insulators, anchor bolts, base plates, and other necessary items to make a complete structure. .bak and .lca files are available upon request. Manufacturer shall optimize pole designs based on provided loads.

2. DEFINITIONS:

Cambering - the fabricating of a slight convex curve in a pole or crossarm

D/t - the ratio of the diameter of a tubular pole to the steel plate thickness

Engineer - a registered or licensed person, who may be a staff employee or an outside consultant, and who provides engineering services. Engineer also includes duly authorized assistants and representatives of the licensed person.

Ground Line - a designated location on the pole where the surface of the ground will be after installation of a direct embedded pole

Load factors (LF) - a multiplier which is applied to each of the vertical, transverse and longitudinal structure loads to obtain an ultimate load

P-delta (P-t1) moment - secondary moment created by the vertical loads acting on the structure when the structure deflects from its unloaded position

Point of Fixity - location on the pole at ground line or below ground line where the maximum moment occurs

Pole twist - Spiral rotation of a pole section relative to the pole end. It is caused by the residual stress in the steel as received from the mill, the clamping force holding the tube shells together and the heat applied during the seam welding process.

Raking - the practice of installing a straight pole out of plumb, or at an inclined angle

w/t - ratio of the width of the pole (flat-to-flat) to the plate thickness

Ultimate load - the maximum design load which includes the appropriate load factor specified

UNC – Unified Coarse Threads

3. CODES AND STANDARDS

Codes, standards, or other documents referred to in this specification shall be considered as part of this specification. The following codes and standards are referenced:

a. American Society of Civil Engineers (ASCE) Standard, Design of Steel Transmission Pole Structures, Manual 72, latest edition.

b. American Society for Testing and Materials (ASTM), various standards, latest revision.

c. American Concrete Institute (ACI), Building Code Requirements for Reinforced Concrete, ACI 318, latest edition.

d. American Welding Society (AWS), Structural Welding Code, AWS D1.1, latest edition.

e. American National Standards Institute (ANSI), National Electrical Safety Code, ANSI C2, latest edition.

f. Society for Protective Coatings (SSPC, formerly Steel Structure Painting Council)/ National Association of Corrosion Engineers (NACE) Surface Preparations Specification, SSPC/NACE SP-6/NACE 3.

4. CONFLICT BETWEEN THIS SPECIFICATION, DRAWINGS, AND REFERENCED DOCUMENTS

In the event of conflict between this specification and the above referenced documents, the requirements of this specification shall take precedence. In the case of conflict between several referenced documents, the more stringent requirement shall be followed. If a conflict exits between this specification or the referenced documents and the attached drawings, the attached drawings shall be followed. If clarification is necessary, contact the owner or owner's representative.

5. GENERAL REQUIREMENTS

The design, fabrication, allowable stresses, processes, tolerances, and inspection shall conform to the ASCE Standard, Design of Steel Transmission Pole Structures (Manual 72), latest edition, with the following additions and/or exceptions:

a. Design

(1) Pole designs shall be prepared from the attached Pole Replacement Schedule A and configuration drawings (Attachment B of this Specification). Pole designs shall be 12-sided galvanized steel. The H-frame structure cross arm shall be 8-sided galvanized steel. The H-frame structure mounting strap shall be galvanized steel.

(2) Wind pressures shown in the loading criteria shall be multiplied by the appropriate shape factor applied to the poles. Pressures in psf shall be computed as follows:

$$p = W \times C_d$$

Where p = pressure on projected area of the pole normal to wind, W = wind pressure, and C_d = shape (or drag) factor.

Shape factors for computing the wind on poles are:

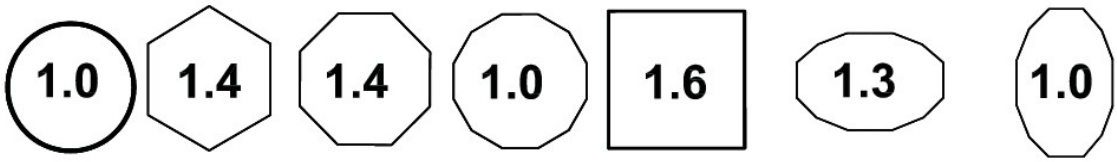

(3) The maximum design unit stress shall be the minimum yield strength as stated in applicable ASTM specifications for the particular application and types of loads, including load factors.

(4) **Poles shall be designed with a maximum of two joints.** Field welding shall not be allowed as part of the design of a new pole. The shaft joints to be made in the field shall be slip joints or bolted flange joints. Slip joint length shall be at least 1-1/2 times the largest inside diameter of the female section. Bolted flange joints shall be used for medium angle and heavy angle guyed structures and cross-braced H-Frames.

Manufacturer shall verify slip joint fit before shipment. Joints should not interfere with joints, step nuts, ladder clips, or jacking nuts.

Sufficient jacking lugs and permanent orientation marks shall be provided at all slip joints to ensure proper alignment and complete overlap of the joint.

(5) The ultimate load in guys shall not exceed 65 percent of the rated breaking strength of the guy.

(6) Design of anchor bolts shall be in accordance with the ACI-318-1983 Edition, Building Code Requirements for Reinforced Concrete, assuming a concrete strength as specified by the owner.

When anchor bolts are specified, they shall have the top 2 feet galvanized. Anchor bolts shall be threaded at the top end a distance equal to the baseplate thickness plus the thickness of two anchor bolt nuts plus 2-1/2". Each anchor bolt shall include two heavy hex nuts.

Welding on anchor bolts will only be allowed in the bottom 12 inches. Only one length of anchor bolt shall be used on each pole. Anchor bolts/clusters shall be plainly marked to indicate the structure type, structure number,

orientation, and top of concrete. Anchor bolts shall be designed to be shipped as a rigid cage with top and bottom plates holding the anchor bolts in place. The anchor bolt thread shall be protected during shipping. The anchor bolts shall be welded to the holding plate in the bottom of the cage. The top template shall be designed to be removable and to support the assembled cage during lifting and setting operations without detrimental deformations. Bolt clusters shall be designed to be rigid enough to withstand the normal jolts of shipping, handling and installation with no displacement of bolts from the proper positions within the cluster.

The removable template at the top shall be marked to show the centerline for tangent structures and the angle bisector for angle structures. Matching marks are to be on the base plate of the structure so proper alignment can be made.

(7) Minimum plate thickness for all pole components shall be 3/16 inch.

(8) Structures which are to be direct embedded shall have bearing plates and ground sleeves. Bearing plates shall have a diameter not more than 2 inches greater than the maximum pole diameter.

Galvanized poles shall have a drain hole at the bottom. The drain hole shall not be more than 20% of the bottom plate surface area.

Direct embedded and vibratory caisson steel poles shall have ground sleeves. Ground sleeves shall have a minimum length of 4 feet centered at ground line.

The ground sleeve shall have a minimum thickness of 3/16 inch and shall be centered at the ground line. A seal weld shall be provided around the ground sleeve. The ground sleeve shall not be considered in strength calculations.

(9) Poles shall have nearly a uniform taper throughout their entire length. The maximum difference in tapers between two pole sections measured by the diameters shall be .20 inch/ft. for poles with variable taper.

(10) Poles with elliptical cross sections shall have a minor axis dimension equal to at least 75 percent of the major axis dimension.

(11) All unguyed angle poles or unguyed tangent deadends shall be precambered to remain plumb when the calculated deflection at the top of the pole exceeds 1.5 percent of the pole height under an initial conductor tension loading of 60°F, no wind, and no load factors. Pole height shall be the height of the pole from the top of the baseplate, or designated ground line, to the top. Tangent poles with unbalanced vertical loadings shall be precambered for the previously stated conditions.

(12) Arms shall be designed so the end of the arm is at the specified height under a loading of initial conductor tension, 60°F, no wind, and no load factors.

Arms shall not deflect vertically more than 12 inches at the end of the arm under heavy ice conditions (without any load factors applied).

Arms shall be upswept or straight, tapered, steel tubular members, of any cross-sectional type, which meet the dimensions shown on the attached drawings.

Arm end plate connection details for hardware attachment shall be typical of those shown on the attached drawings. The arms shall be hermetically sealed when a painted finish is specified. Galvanized arms shall have drain holes where appropriate.

(13) Lifting lugs are optional. The manufacturer shall supply all instructions for handling and erection of poles and arms.

(14) In the design of connections for vangs, brackets, or stiffeners attached to the pole shaft, care shall be taken to distribute the loads sufficiently to protect the wall of the pole from local buckling.

(15) Thru-vang shall penetrate both sides of the pole with attachment holes on both sides.

(16) Each pole shall be permanently marked on the pole shaft 60 inches above ground line and on the bottom of baseplate or bearing plate with the following identifying information: manufacturer's identification, structure type, height, structure number, ultimate groundline moment, owner name, and date manufactured. The method of identification shall be approved by the owner.

(17) Each steel pole section shall be marked with a weld bead indicating the location of that sections center of gravity and shall be marked with identification information.

(18) Each separate part of steel pole structure shall be marked in accordance with SUPPLIER'S drawings. Marking shall be made by addition of weld metal and shall be clearly legible after finishing.

b. Materials

(1) All materials shall comply with the applicable requirements of ASTM specifications. Any modifications to ASTM specifications must be approved by the owner's representative prior to bidding.

(2) Poles, arms and conductor brackets shall conform to ASTM A36, ASTM A572, ASTM 581, ASTM A588, ASTM A871 or ASTM A595.

(3) Base plate shall conform to ASTM A572, ASTM A588, ASTM A633, or ASTM A595.

(4) Anchor bolts shall conform to ASTM A615, Grade 60 or 75.

(5) Other bolts and nuts shall conform, as applicable, to ASTM A307, ASTM A325, ASTM A354, ASTM A394, or ASTM A687. Locknuts shall be provided for each structure bolt, or American Nut Company (ANCO) type self-locking nuts may be used. Locknuts shall be the galvanized MF type or ANCO type.

(6) Anchor bolts, structural plate, and weld material, shall meet ASCE requirements for Charpy tests.

(7) For galvanized structures, steel used for the pole shaft and arms shall have a silicon content less than .06 percent.

c. Fabrication

(1) All welding shall be in accordance with the AWS D1.1, latest edition. Welders shall be qualified in accordance with AWS D1.1 welding procedures.

(2) One hundred percent penetration welds shall be required in, but not limited to, the following areas:

a. circumferential welds (C-welds) joining structural members;

b. longitudinal welds in the female portion of the joint within the slip joint area;

c. welds at the butt joints of back-up strips; and

d. base plate to shaft weld.

e. longitudinal welds for a minimum length of 3 inches where there are adjacent C-welds, flange welds, base welds and ends of tubes.

(3) Full penetration or equivalent 90 percent partial penetration with fillet overlay shall be used for arm-to-arm base, vang-to-plate shaft, and arm box joints.

(4) Quality and acceptability of every inch of the full penetration welds shall be determined by visual and ultrasonic inspection.

(5) All other penetration welds shall have 60 percent minimum penetration. Quality and acceptability of all welds other than full penetration welds shall be determined by visual inspection, supplemented by magnetic particle, ultrasonic or dye penetrant inspection.

(6) All weld back-up strips shall be continuous the full length of the welds. Care shall be exercised in the design of welded connections to avoid areas of high stress concentration which could be subject to fatigue or brittle fractures.

(7) Field welding shall not be permitted except with owner's approval and the manufacturer's direction in repairing a pole.

(8) All parts of the structure shall be neatly finished and free from kinks or twists. All holes, blocks, and clips shall be made with sharp tools and shall be clean-cut without torn or ragged edges.

(9) Before being laid out or worked in any manner, structural material shall be straight and clean. If straightening is necessary, it shall be done by methods that will not damage the metal.

(10) Shearing and cutting shall be performed carefully and all portions of the work shall be finished neatly. Copes and re-entrant cuts shall be filleted before cutting.

(11) All forming or bending during fabrication shall be done by methods that will prevent embrittlement or loss of strength in the material being worked.

(12) Holes for connection bolts shall be 1/16 inch larger than the nominal diameter of the bolts. Holes in the flange plates for bolted splices shall be 1/8 inch larger than the bolt diameter. Holes in the base plates for anchor bolts shall be 3/8 inch larger than the nominal diameter of the anchor bolts. The details of all connections and splices shall be subject to the approval of the owner or his representatives.

(13) Holes in steel plates which are punched must be smooth and cylindrical without excessive tear out or depressions. Any burrs that remain after punching shall be removed by grinding, reaming, etc.

(14) Holes of any diameter may be drilled in plate of any thickness. Care shall be taken to maintain accuracy when drilling stacks of plates.

(15) Holes may be made by use of a machine guided oxygen torch. Flame cut edges shall be reasonably smooth and suitable for the stresses transmitted to them.

(16) Field drilled holes must be approved by the owner. The manufacture must supply a galvanizing touch-up kit for galvanized poles.

d. Tolerances

Manufacturing tolerances shall be limited to the following:

Pole Length	One piece: ±2 inches, or ±1 inch ±1/8 inch per 10 feet of length, whichever is greater (i.e. - 120 foot pole shall have a length of 120 feet ±2½ inches)	
	Assembled pole with flange connections: same as for one piece Assembled pole with slip joint connections: The accumulation of the slip joint tolerances not to exceed –6", +12"	
Pole Diameter	-0 inch, +1/4 inch	
Pole End Squareness	±1/2 inch per foot of pole diameter	
Pole Sweep	1/8 inch per 10 feet of pole length	
Pole Twist	Limit twist to 1°/10' of length, not to exceed 4°/tube segment. Overall structure twist shall be limited to 10° for embedded and 6° for base plated structures. Connections for all appurtenances to the pole shall account for the pole twist and should align vertically.	
Slip Joint tolerances	Tolerances per manufacturer's recommendations and total pole length requirements above.	
Location of Groups of Bolt Holes from Top of Pole	±1.0 inches (tolerance to dimension 'A', Figure 2)	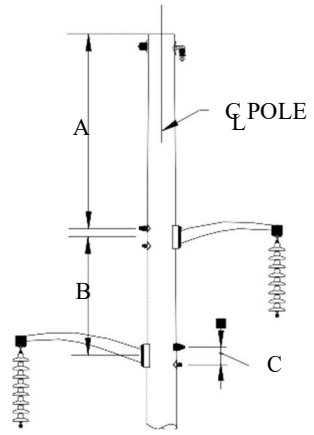 FIGURE 2
Location of Centerline Between Groups of Bolt Holes	±1.0 inch (tolerance to dimension 'B', Figure 2)	
Location of Holes Within a Group of Bolt Holes	±1/8 inch (tolerance to dimension 'C', Figure 2)	
Bolt Hole Alignment	Not to vary from the longitudinal pole centerline of that group of holes by more than 1/16 inch	
Location of Identification Plate	±2.0 inch	

e. Grounding

(1) A grounding connection shall be welded to the pole shaft 12 inches above the ground collar. The grounding connection will be either the two-hole NEMA pad, or a nut, or a threaded insert installed in the pole, or an approved alternative.

(2) Grounding pad face shall not be painted or covered with other coatings. The grounding nut thread and grounding pad threads shall be protected from

coatings.

(3) Poles shall be pre-drilled with a nine-sixteenth inch (9/16″) hole behind each threaded hole of a two (2)-hole NEMA pad to permit the use of various bolt lengths in completing a grounding connection.

(4) Threaded inserts installed for grounding shall be made of Type 316 stainless steel and provided with standard ½ inch, 13 UNC threads. Threads shall be protected from coatings.

f. Finishes

(1) The following finishes are acceptable: galvanizing, zinc primer and painting, and below grade coating.

a. Galvanizing - All structures and structural components which are hot-dip galvanized shall meet all the requirements of ASTM A123 or ASTM A153. Measures shall be taken to prevent warping and distortion according to ASTM A384 and to prevent embrittlement according to ASTM A143. Poles made of ASTM A588 steel shall not be galvanized due to the high silicon content of the steel. One gallon of zinc enriched paint shall be provided with each five poles.

b. Coatings for the Embedded Portion of the Pole - When poles are to be directly embedded, a 16 mil (minimum dry film thickness), two component hydrocarbon extended polyurethane coating that is resistant to ultraviolet light shall be applied on the exposed surface of the embedded portion of the pole. The coating shall extend from the butt to the top of the ground sleeve. Other coatings shall be approved by the owner prior to their use.

(2) Bolts and nuts with yield strengths less than 100,000 psi shall be hot-dip galvanized per ASTM A153 and ASTM A143, or mechanically coated with zinc in accordance with ASTM B454, Class 50. Bolting materials with yield strengths in excess of 100,000 psi shall not be hot-dip galvanized. Instead, they shall be painted with zinc enriched paint or mechanically coated with zinc per ASTM B454, Class 50.

(3) Compliance with coating thickness requirements shall be checked with a magnetic thickness gauge.

g. Inspection and Testing

(1) The owner and the owner's designated agents shall have free entry at all times while work is being carried on, to all parts of the manufacturer's plant to inspect any part of the production of the poles covered by this specification.

(2) Steel members which are bent or warped or otherwise improperly fabricated shall be properly repaired or replaced.

(3) The cost of tests made by the manufacturer (except full scale load tests on poles), including cost of the certified test reports shall be considered included

in the price.

(4) The manufacturer shall make tests in accordance with ASTM A370 and ASTM A673verifying that the material used in the structures, meets the impact properties.

(5) Mill test reports showing chemical and physical properties of all material furnished under this specification shall be maintained by the manufacturer for a period of 5 years and shall be traceable to the structure.

(6) All plates over 1-1/2 inches thick shall be ultrasonically tested to assure against defects which could lead to lamellar tearing.

(7) Welders or welding operators shall be qualified in accordance with the provisions of AWS D1.1.

(8) The manufacturer shall make certified welding reports for each structure. The reports covering welding shall include all welds of each structure. Each weld shall be clearly identified; and the report shall consist of the method of testing, whether the weld is acceptable, the identification of the structure, the date, and the name and signature of the inspector.

h. Shipping

(1) Each shipment shall be accompanied by a list of all parts, identifiable by structure type and number. Arms, bolts and miscellaneous hardware will be identified by the list for match up with the respective pole shaft. All parts required for any one structure shall be in one shipment, if possible.

(2) The owner and owner's representative shall be notified prior to shipment that such shipment is to take place, and they reserve the right to inspect the components prior to shipment. The notification shall give quantities, weight, name of common carrier used, and expected time of arrival with at least two (2) working days' notice of delivery. Delivery of all items of material shall be made at such time as to permit unloading between the hours of 9:00 a.m. and 3:00 p.m., Tuesday through Thursday, holidays excluded.

(3) The anchor bolts shall be welded to the holding plate in the bottom of the cage. A removable template shall be used at the top of the cage and shall be marked to show the centerline for tangent structures and the angle bisector for angle structures. Matching marks are to be on the base plate so proper alignment can be made. Bolt clusters shall be rigid enough to withstand the normal jolts of shipping and handling with no displacement of bolts from the proper positions within the cluster.

(4) Unless otherwise agreed to by the owner, the anchor bolt cage shall be shipped at least 30 days prior to pole shipment.

(5) Salt-treated wood blocking and urethane foams shall not be used when shipping or storing steel poles.

(6) Delivery shall be made either to a single designated location or to the individual structure locations.

i. Standard Class Designations

(1) Tangent and guyed angle structures have been specified using RUS Standard Steel Pole Class Designations shown in Table 1 unless noted otherwise.

(2) Pole designs shall be prepared for the attached Standard Class design loads. The poles shall be designed to meet ASCE Manual No. 48-11, "Design of Steel Transmission Pole Structures," design methods. The point-of-fixity shall be considered to be located at a distance from the pole bottom that is equal to seven percent (7%) of the pole length.

The pole shall be symmetrically designed such that the strength required in any one direction shall be required in all directions about the longitudinal axis.

(3) Using the corresponding values in Table 1, the poles shall be designed for the following requirements.

a. The pole shall develop the minimum ultimate moment capacity required in Table 1 at a distance of five feet (5′-0″) from the pole top

b. The pole shall develop the minimum ultimate moment capacity above the point-of-fixity that is calculated by multiplying the tip load in Table 1 by the distance to the tip load.

c. The geometry and taper of the pole shall be uniform throughout their entire length (top to butt).

(4) The poles shall be designed to withstand the specified tip loading in Table 1 without exceeding a pole deflection of ten percent (10%) of the pole length above the point-of-fixity when tested in accordance with ASCE Manual No. 48-11.

(5) Overall length of poles shall be designed and manufactured in incremental lengths of five feet (5′-0″).

TABLE 1 – Strength Requirements

Standard Class Designations for Steel Poles	Minimum Ultimate Moment Capacity at 5 ft from Pole Top (ft. Kips)	Horizontal Tip Load Applied 2 ft from Pole Top (lbs.)
S-20.0	160	20000
S-19.0	152	19000
S-18.0	144	18000
S-17.0	136	17000
S-16.0	128	16000
S-15.0	120	15000
S-14.0	112	14000
S-13.0	104	13000
S-12.0	96	12000
S-11.0	88	11000
S-10.0	80	10000
S-09.0	72	9000
S-08.0	64	8000
S-07.4	57	7410
S-06.5	50	6500
S-05.7	44	5655
S-04.9	38	4875
S-04.2	32	4160
S-03.5	27	3510
S-02.9	23	2925
S-02.4	19	2405
S-02.0	15	1950

6. INFORMATION TO BE SUPPLIED BY THE MANUFACTURER

a. Information to be supplied with the proposal (Attachment D of this Specification).

(1) Calculated shipping weight of each structure excluding anchor bolts. Separate weights shall be given for arms and poles.

(2) Calculated shipping weight of anchor bolts.

(3) Ultimate ground line reactions (including load factors) in poles and guy wires.

(4) Anchor bolt size, length and locations (bolt circle diameters).

(5) Type of material of major components (ASTM number).

(6) Description of pole shaft, including thickness, length, diameter, cross-sectional geometry, and method of fastening each shaft component.

(7) Data showing the design of the arm, arm connections, arm attachment plates and brackets.

(8) Sketches or draft drawings of structure and structure attachments.

b. Documentation to be supplied for the owner's approval prior to fabrication

Documentation includes final design calculations for pole shaft, base plate, anchor bolts, arms, and other appurtenances, including their connections for all structures. The following information shall be supplied:

(1) For the loading cases with load factors, the total shear, axial forces, moments, stresses or stress ratios, section moduli, cross-sectional areas, deflections w/t's for polygonal and D/t's for round cross sections at all splices, at arm attachment points (top and bottom), and at least every 10 feet along the pole.

(2) For the critical loading case, shear and axial forces, moments, stresses, section moduli, cross-sectional areas at the arm connections, bolt stresses in the arm connection, and deflection at the end of the arm.

(3) Anticipated deflections at the top of the pole and at the ends of the arms shall be indicated for each pole for the normal, everyday loading condition of 60°F, no wind, and no load factors.

(4) For all specified loading cases, reactions and ground line moments shall be supplied.

(5) Detail drawings for each structure type giving weights of structure components, dimensions, and bill of materials.

(6) Assembly instructions and erection drawings. Slip joint lengths and allowable tolerances. Special handling instructions.

c. Final Documents shall be supplied to the owner for the items in Section 6.b.(5), after erection of all structures and prior to final payment.

d. Test Reports (as requested).

(1) Certified mill test reports for all structural material.

(2) Certified welding reports for each structure.

(3) Impact property test reports showing that the material used in the structures meets the impact properties.

(4) Test reports on coating thickness.

(5) Report of structure testing, when required, including photographs, diagrams, load trees, etc.

(6) Material, workmanship, inspection travelers, and material certified mill test reports shall be maintained on file for a minimum of six (6) years by the Materialman, and shall be made available to Greenville Utilities Commission or the Engineer upon request at no charge.

7. APPROVAL, ACCEPTANCE, AND OWNERSHIP

a. Final designs must be approved by the owner or owner's representative before material ordering and fabrication. Material ordering and fabrication prior to approval will be at supplier's risk. It is understood that award of this contract does not constitute acceptance of design calculations submitted with the bid, if corrections are required in the final structure designs due to manufacturer's errors, omissions, or misinterpretations of the specifications, the quoted price shall not change. Approval of the drawings and calculations by the owner or the owner's representative does not relieve the supplier of responsibility for the adequacy of the design, correctness of dimensions, details on the drawings, and the proper fit of parts.

b. After delivery, the poles will be inspected and shall be free of dirt, oil blisters, flux, black spots, dross, tear-drop edges, flaking paint or zinc; and in general, shall be smooth, attractive, and unscarred. Poles not meeting this requirement shall be repaired or replaced by the fabricator at no additional cost to the owner.

c. All final drawings shall become the property of the owner, who shall have full rights to reproduce drawings and use them as the owner sees fit, including submitting them to other vendors for the purpose of obtaining bids on future steel pole purchases.

8. LIST OF ATTACHMENTS TO THIS SPECIFICATION

a. Attachment A, Pole Replacement Schedule

b. Attachment B, Structure Drawings

c. Attachment C, Structure Weights and Costs

d. Attachment D, Bid Summary-Design Information, and Weights

Attachment A, Pole Replacement Schedule

Circuit 18 & WINT SS Tubular Steel Structures						
Structure #	Pole Height (ft.)	RUS Class	Minimum Embedment (ft.)	Minimum Caisson Diameter (ft.)	Structure Type	Drawing
11.1	70	ENGR	27	5	Vertical, Large Angle, Double Deadend	TSV4.C4
11.2	65	ENGR	27	4.5	Vertical, Large Angle, Double Deadend	TSV4
11.3	70	S-06.5	9	-	Vertical, Large Angle, Double Deadend w Dbl Ckt Distribution	TSV4
18.1 - 18.3	90	S-08.0	11	-	Z-Frame Tangent w/ Tan Vert Dbl Ckt UB	TPZ1.DV1
18.4	85	S-07.4	10.5	-	Vertical DDE Small Angle, Dbl Ckt Vert DDE small angle	TSV6.DV6
18.5	85	S-07.4	10.5	-	Z-Frame Tangent	TPZ1
18.6	85	S-07.4	10.5	-	Z-Frame Tangent	TPZ1
18.7	90	S-08.0	11	-	Vertical DDE Large Angle	TSV4
18.8	90	S-08.0	11	-	Z-Frame Tangent	TPZ1
18.9	90	S-08.0	11	-	Z-Frame Tangent, Z-Frame Dist UB	TPZ1.C1
18.10, 18.11	80	S-07.4	10	-	Z-Frame Tangent, Z-Frame Dist UB	TPZ1.C1
18.12	75	S-06.5	9.5	-	Z-Frame Tangent, Z-Frame Dist UB	TPZ1.C1
18.13	85	S-07.4	10.5	-	Z-Frame Tangent, Z-Frame UB w/ 3ph tap	TPZ1.C1
18.14	90	S-08.0	10	-	Vert Tangent, Vert Tangent (2-pin turn on MIF) UB	TPV1.C2
18.15	85	S-07.4	10.5	-	Z-Frame Tangent, Distribution UB, Horizontal Gangswitch.	TPZ1.C1
18.16	85	S-07.4	10.5	-	Z-Frame Tangent, Distribution UB, Horizontal Gangswitch.	TPZ1.C1
18.17	85	S-07.4	10.5	-	Z-Frame Tangent, Z-Frame UB	TPZ1.C1
18.18	85	S-07.4	10.5	-	Z-Frame Tangent, Z-Frame UB	TPZ1.C1
18.19	85	S-07.4	10.5	-	Z-Frame Tangent, Z-Frame UB	TPZ1.C1
18.20	85	S-07.4	10.5	-	Vertical Frame Tangent, Vertical Dist UB, 2-pin turn	TPV1.C2
18.21	85	S-07.4	10.5	-	Z-Frame Tangent, Z-Frame UB	TPZ1.C1
18.22	85	S-07.4	10.5	-	Vertical Frame Tangent, 4-way DDE, Vertical Gangswitch	TPV1.DV4
18.23	85	S-07.4	10.5	-	Z-Frame Tangent, Z-frame Dist UB.	TPZ1.C1
18.24	85	S-07.4	10.5	-	Z-Frame Tangent, Z-frame Dist UB.	TPZ1.C1
18.25	85	S-07.4	10.5	-	Z-Frame Tangent, Z-frame Dist UB.	TPZ1.C1
18.26	85	S-07.4	10.5	-	Z-Frame Tangent, Z-frame Dist UB.	TPZ1.C1
18.27	85	S-07.4	10.5	-	Z-Frame Tangent, Z-frame Dist UB.	TPZ1.C1
18.28	90	S-08.0	10.5	-	Vertical Frame Tangent, Vert Dist UB, 2-pin turn	TPV1.C2
18.29	85	S-07.4	10.5	-	Vertical Large Angle Susp, Vert Dist UB Large Angle Susp.	TSV3.V3
18.30	85	S-07.4	10.5	-	Z-Frame Tangent, Z-frame Dist UB	TPZ1.C1
18.31	85	S-07.4	10.5	-	Z-Frame Tangent, Z-frame Dist UB, 2-pin turn	TPZ1.C2
Blank	70	S-06.5	9	-	3 Blank Steel Poles	SP-70

Attachment B, Structure Drawings

[Balance of page left blank intentionally]

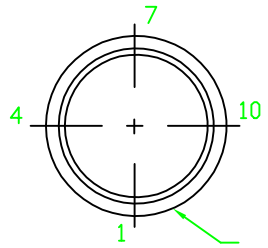

THRU HOLE BORING DETAIL		
DIAMETER	FROM SMALL END	FLAT#
11/16"	33'-6"	1
11/16"	34'-6"	1
11/16"	37'-6"	1
11/16"	38'-6"	1
11/16"	41'-6"	1
11/16"	42'-6"	1
11/16"	48'-6"	4

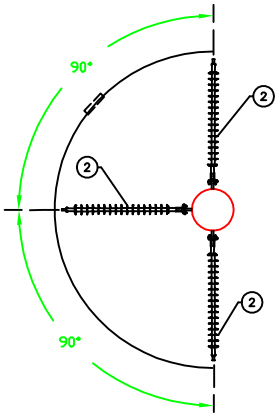

OVERHEAD VIEW

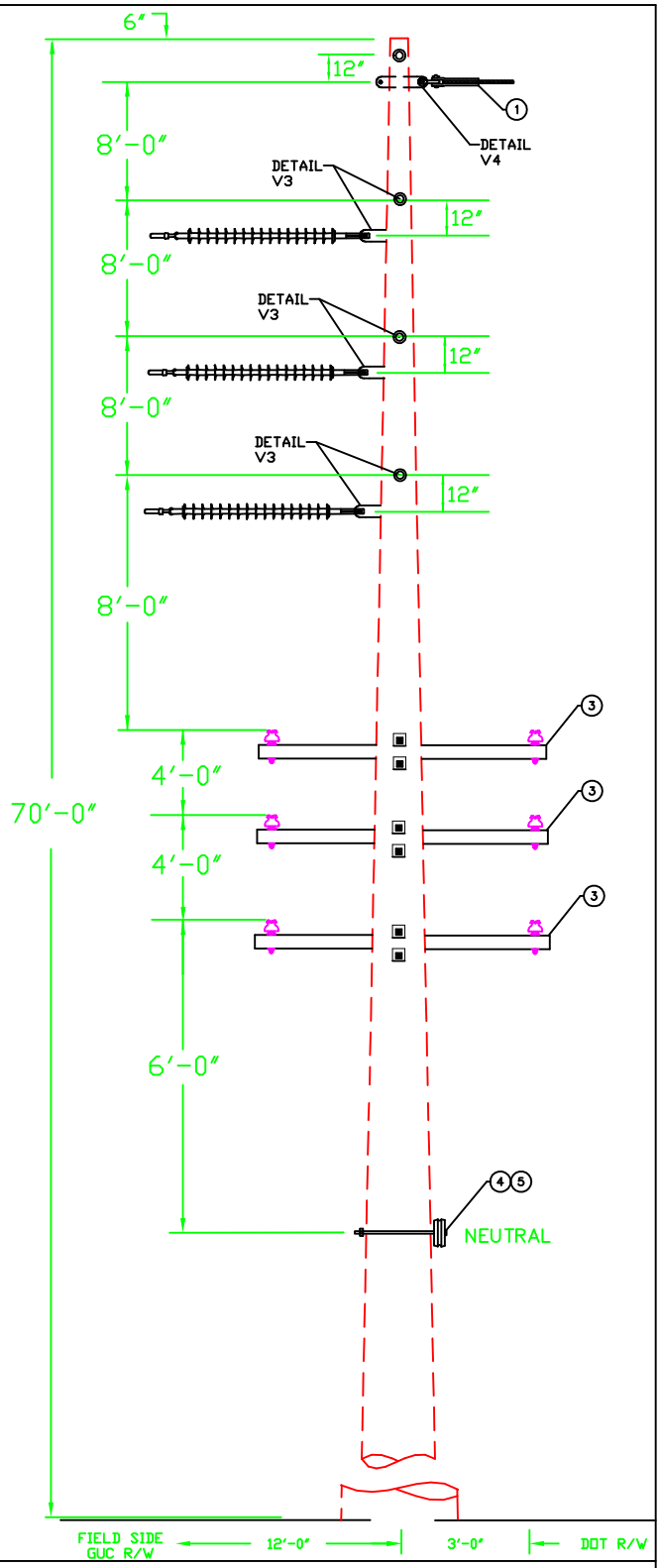

NOTE:

1) DRAWING IS NOT TO SCALE. ALL DIMENSIONS ARE O.C. OF INSULATOR MOUNTS.
2) SEE DWG TMF-VPB-F FOR FLANGE-BASE FOUNDATION DETAILS.

DWG. REF.	ea.	LIST OF MATERIALS DESCRIPTION	ITEM	DET.
1	2	OHGW ASSEMBLY, DEADEND	–	TM-4
2	9	DEADEND ASSEMBLY, PRIMARY	–	TM-1EM
3	3	8' TANGENT CROSSARM ASSY	–	XRM-10DE
4	2	NEUTRAL SPOOL ASSEMBLY	–	NS-336
5	1	NEUTRAL GROUNDING ASSEMBLY	–	NG-1
	1	DRIVEN GROUND ROD ASSEMBLY	–	TM-9

GREENVILLE UTILITIES COMMISSION
GREENVILLE, NORTH CAROLINA

Greenville Utilities

STRUCTURE 11.1
115 KV 3 PHASE, VERTICAL STRUCTURE LARGE ANGLE, DOUBLE DEADEND SUSPENSION
VERTICAL DOUBLE CIRCUIT DISTRIBUTION

DWN. DRB		DATE: 02/28/2023	
CKD. JLS		APPD. JLS	
SCALE: N.T.S.			
DATE	REVISION	DATE	REVISION

DWG. NO.
TSV4.C4

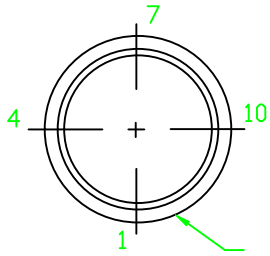

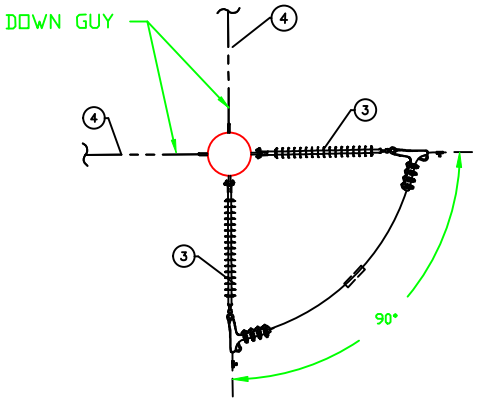

OVERHEAD VIEW

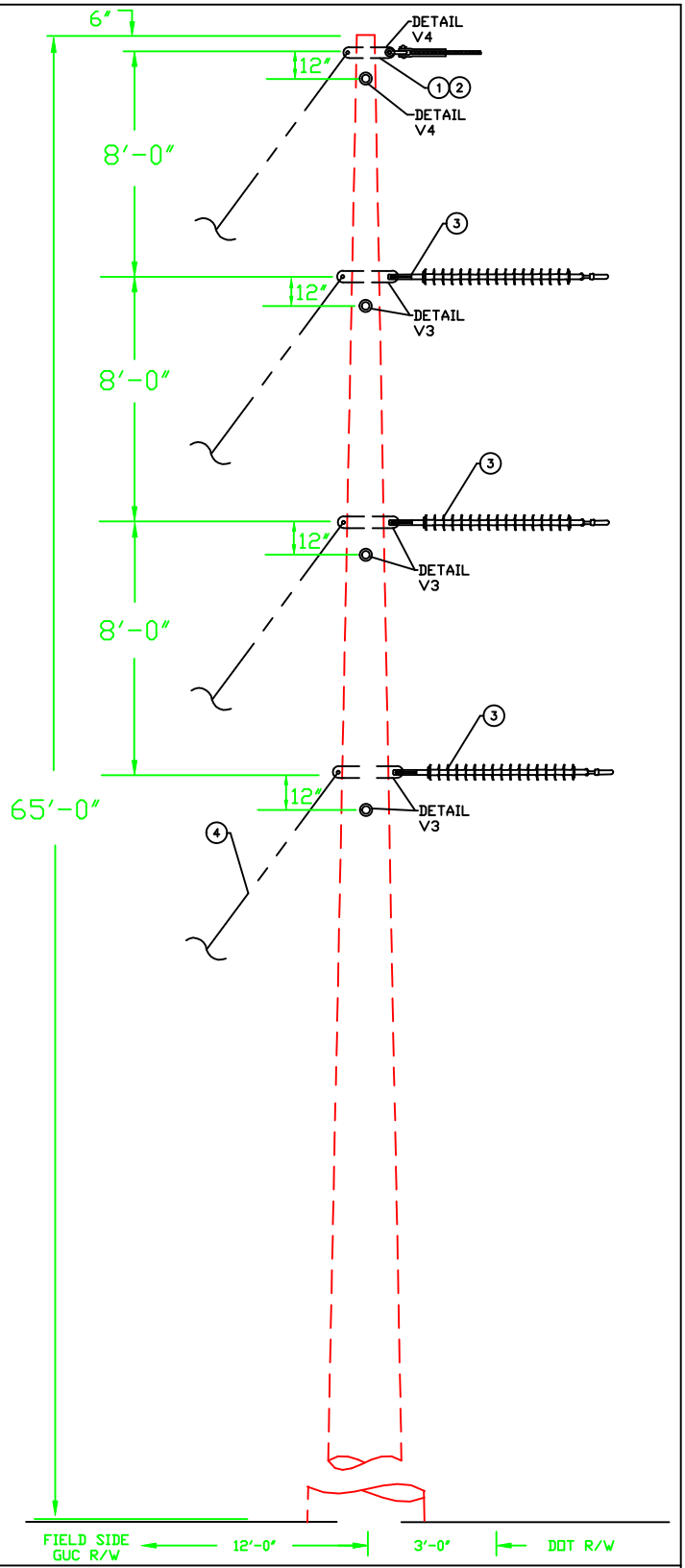

NOTE:

1) DRAWING IS NOT TO SCALE. ALL DIMENSIONS ARE O.C. OF INSULATOR MOUNTS.
2) SEE DWG TMF-VPB-F FOR FLANGE-BASE FOUNDATION DETAILS.

DWG. REF.	ea.	LIST OF MATERIALS DESCRIPTION	ITEM	DET.
1	2	OHGW ASSEMBLY, DEADEND	–	TM-4
2	1	OHGW GROUNDING ASSEMBLY	–	TM-9X(S)
3	6	DEADEND ASSEMBLY, PRIMARY	–	TM-1EM
4	8	SINGLE DOWN GUY	–	TG-21A
	1	DRIVEN GROUND ROD ASSEMBLY	–	TM-9
	8	ANCHOR ASSEMBLY, TRANSMISSION	–	TA-2H

GREENVILLE UTILITIES COMMISSION
GREENVILLE, NORTH CAROLINA

Greenville Utilities

STRUCTURE 11.2
115 KV 3 PHASE, VERTICAL STRUCTURE LARGE ANGLE, DOUBLE DEADEND SUSPENSION

DWN. DRB		DATE: 11/3/2025	
CKD. JLS		APPD. JLS	
SCALE: N.T.S.			
DATE	REVISION	DATE	REVISION

DWG. NO.

TSV4

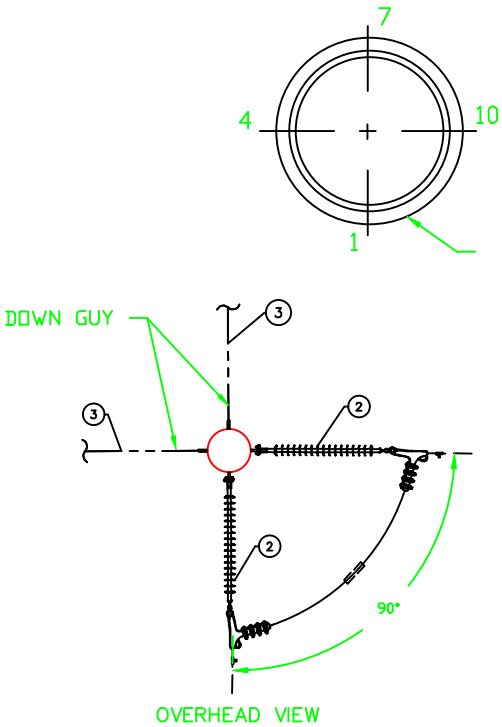

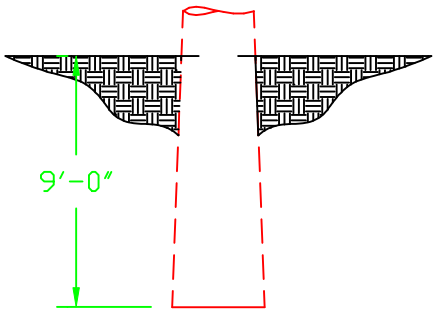

70' Structure Embedment

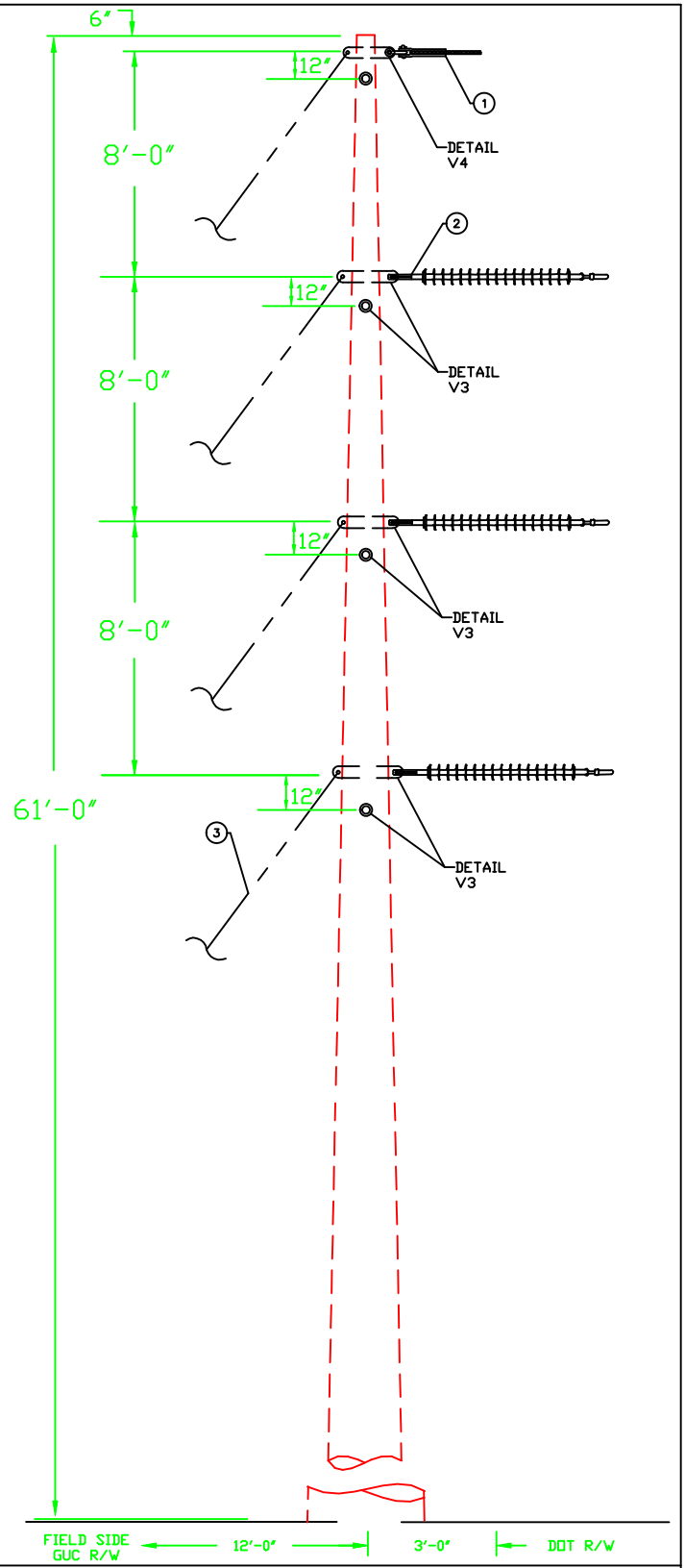

NOTE:

1) DRAWING IS NOT TO SCALE. ALL DIMENSIONS ARE O.C. OF INSULATOR MOUNTS.

DWG. REF.	ea.	LIST OF MATERIALS DESCRIPTION	ITEM	DET.
1	2	OHGW ASSEMBLY, DEADEND	–	TM–4
2	6	DEADEND ASSEMBLY, PRIMARY	–	TM–1EM
3	14	SINGLE DOWN GUY	–	TG–21A
4	2	DEADEND CROSSARM ASSEMBLY	–	XRM–10DE
5	2	NEUTRAL DEADEND ASSEMBLY	–	NDE–336
6	1	NEUTRAL GROUNDING ASSEMBLY	–	NG–1
	1	DRIVEN GROUND ROD ASSEMBLY	–	TM–9
	14	ANCHOR ASSEMBLY, TRANSMISSION	–	TA–2H

GREENVILLE UTILITIES COMMISSION
GREENVILLE, NORTH CAROLINA

Greenville Utilities

STRUCTURE 11.3
115 KV 3 PHASE, VERTICAL STRUCTURE LARGE ANGLE, DOUBLE DEADEND SUSPENSION

DWN. DRB		DATE: 02/28/2023	
CKD. JLS		APPD. JLS	
SCALE: N.T.S.			
DATE	REVISION	DATE	REVISION

DWG. NO.

TSV4

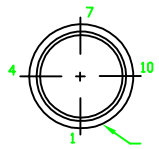

THRU HOLE BORING DETAIL		
DIAMETER	FROM SMALL END	FLAT#
13/16"	8'–0"	4
13/16"	9'–0"	4
13/16"	14'–0"	4
13/16"	15'–0"	4
13/16"	20'–0"	4
13/16"	21'–0"	4
11/16"	29'–0"	4
11/16"	29'–8"	4
11/16"	32'–6"	4
11/16"	33'–2	4
11/16"	36'–0"	4
11/16"	36'–8"	4
11/16"	41'–6"	4

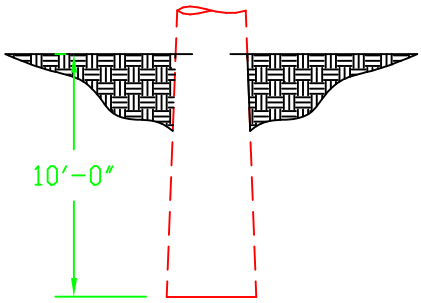

80' STRUCTURE EMBEDMENT

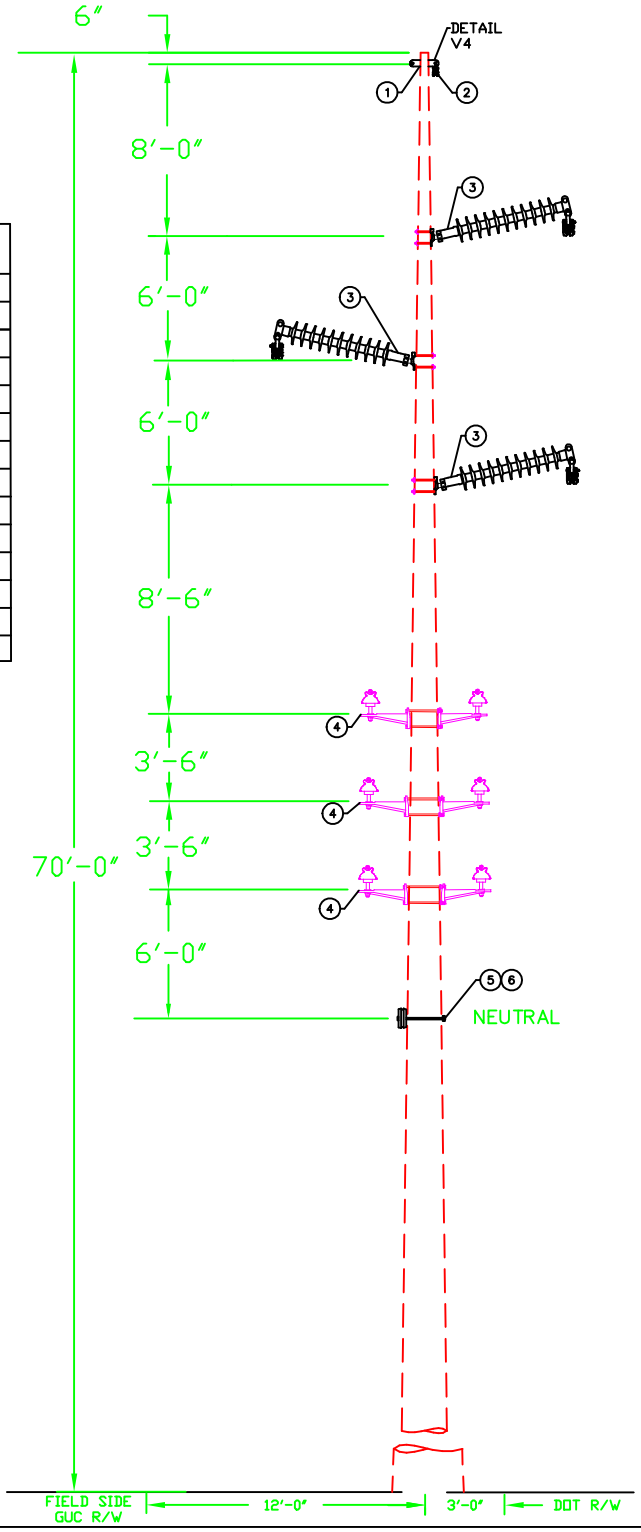

NOTE:

1) DRAWING IS NOT TO SCALE.
2) ALL DIMENSIONS ARE O.C. OF INSULATOR MOUNTS.
3) FIBER WILL BE FIELD DRILLED.

DWG. REF.	ea.	LIST OF MATERIALS DESCRIPTION	ITEM	DET.
1	1	OHGW ASSEMBLY, TANGENT	–	TM–4A
2	1	OHGW GROUNDING ASSEMBLY	–	TM–9X(S)
3	3	115 KV POST INSULATOR ASSEMBLY	–	TM–3DM
4	6	MIF BRACKET ASSEMBLY	–	MIF–1
5	1	NEUTRAL SPOOL ASSEMBLY	–	NS–336
6	1	NEUTRAL GROUNDING ASSEMBLY	–	NG–1
7	1	DRIVEN GROUND ROD ASSEMBLY	–	TM–9

GREENVILLE UTILITIES COMMISSION
GREENVILLE, NORTH CAROLINA

Greenville Utilities

18.1–18.3
115 KV 3 PHASE, Z–FRAME STRUCTURE, TANGENT, POST INSULATORS, WITH VERTICAL TANGENT DISTRIBUTION

DWN. DRB		DATE: 03/07/2025	
CKD. JLS		APPD. JLS	
SCALE: N.T.S.		PAGE 1 of 2	
DATE	REVISION	DATE	REVISION

DWG. NO.
TPZ1.DV1

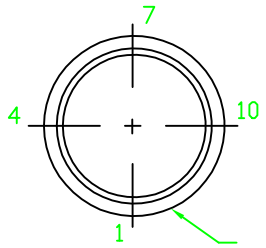

THRU HOLE BORING DETAIL		
DIAMETER	FROM SMALL END	FLAT#
11/16"	33'-0"	4
11/16"	34'-0"	4
11/16"	37'-0"	4
11/16"	38'-0"	4
11/16"	41'-0"	4
11/16"	42'-0"	4

OVERHEAD VIEW

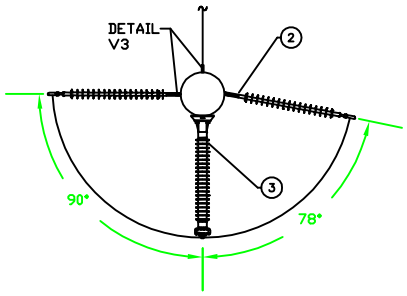

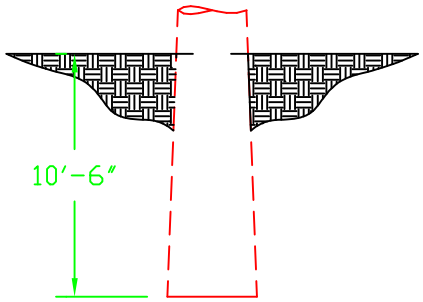

85' Structure Embedment

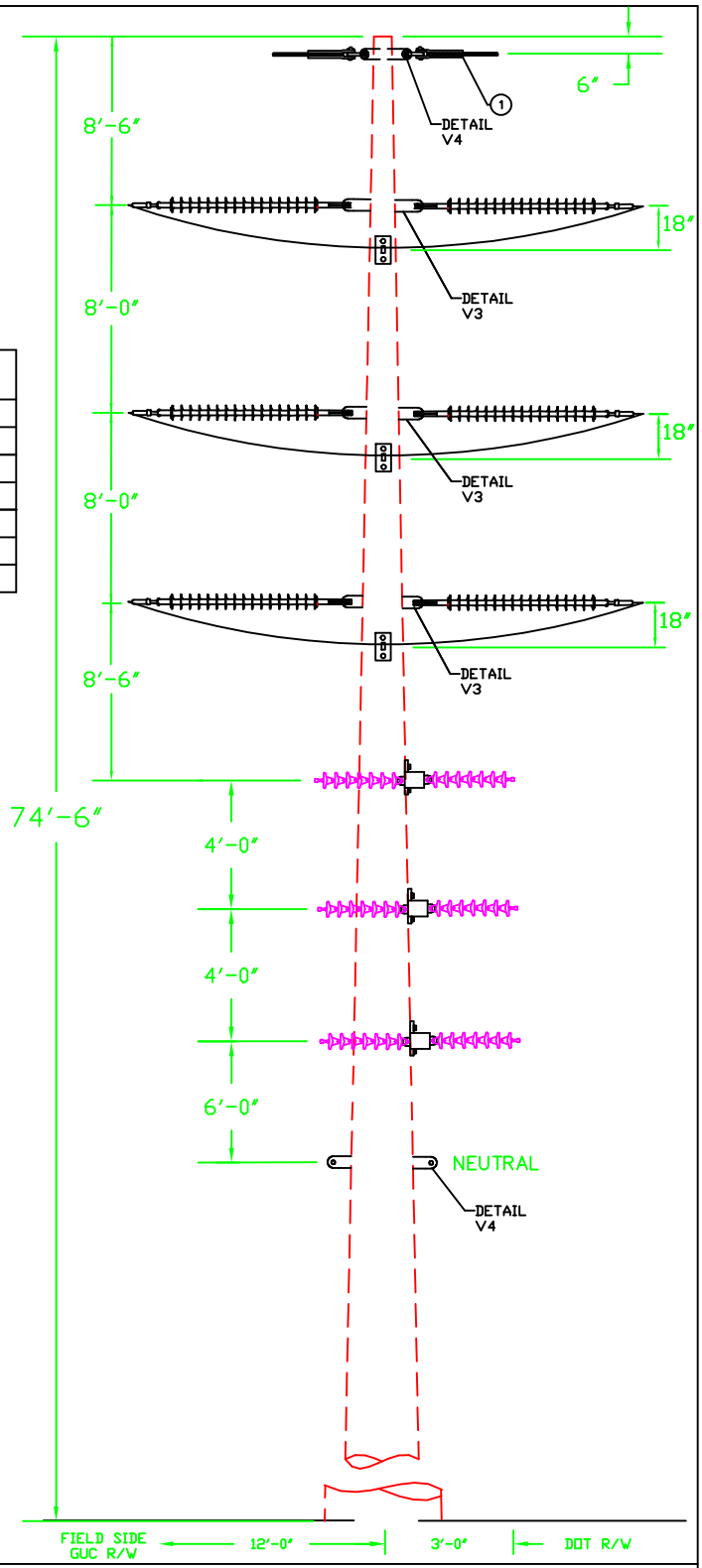

NOTE:

1) DRAWING IS NOT TO SCALE. ALL DIMENSIONS ARE O.C. OF INSULATOR MOUNTS.
2) DOWN GUYS NOT SHOWN IN DWG.

DWG. REF.	ea.	LIST OF MATERIALS DESCRIPTION	ITEM	DET.
1	2	OHGW ASSEMBLY, DEADEND	–	TM-4E
2	1	OHGW GROUNDING ASSEMBLY	–	TM-9X(S)
3	6	DEADEND ASSEMBLY, PRIMARY	–	TM-1EM
	3	115 KV POST INSULATOR, TANGENT	–	TM-3DM
4	4	SINGLE DOWN GUY	–	TG-21A
5	3	8' DDE XRM ASSEMBLY	–	XRM-8DDE
6	1	NEUTRAL DOUBLE DEADEND	–	NDDE-336
	2	NEUTRAL GROUNDING ASSEMBLY	–	NG-1
	1	DRIVEN GROUND ROD ASSEMBLY	–	TM-9
	4	ANCHOR ASSEMBLY, TRANSMISSION	–	TA-2H

GREENVILLE UTILITIES COMMISSION
GREENVILLE, NORTH CAROLINA

Greenville Utilities

STRUCTURE 18.4
115 KV 3 PHASE, VERTICAL STRUCTURE SMALL ANGLE, DOUBLE DEADEND SUSPENSION

DWN. DRB		DATE: 03/25/2025	
CKD. JLS		APPD. JLS	
SCALE: N.T.S.			
DATE	REVISION	DATE	REVISION

DWG. NO.
TSV6.DV6

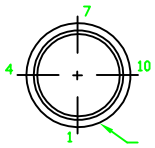

THRU HOLE BORING DETAIL		
DIAMETER	FROM SMALL END	FLAT#
13/16"	8'–0"	4
13/16"	9'–0"	4
13/16"	14'–0"	4
13/16"	15'–0"	4
13/16"	20'–0"	4
13/16"	21'–0"	4

NOTE: DRAWING IS NOT TO SCALE. ALL DIMENSIONS ARE O.C. OF INSULATOR MOUNTS.

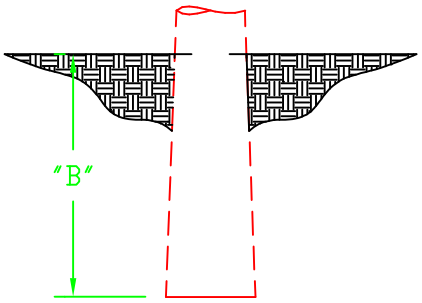

STRUCTURE EMBEDMENT CHART
ON PAGE 2

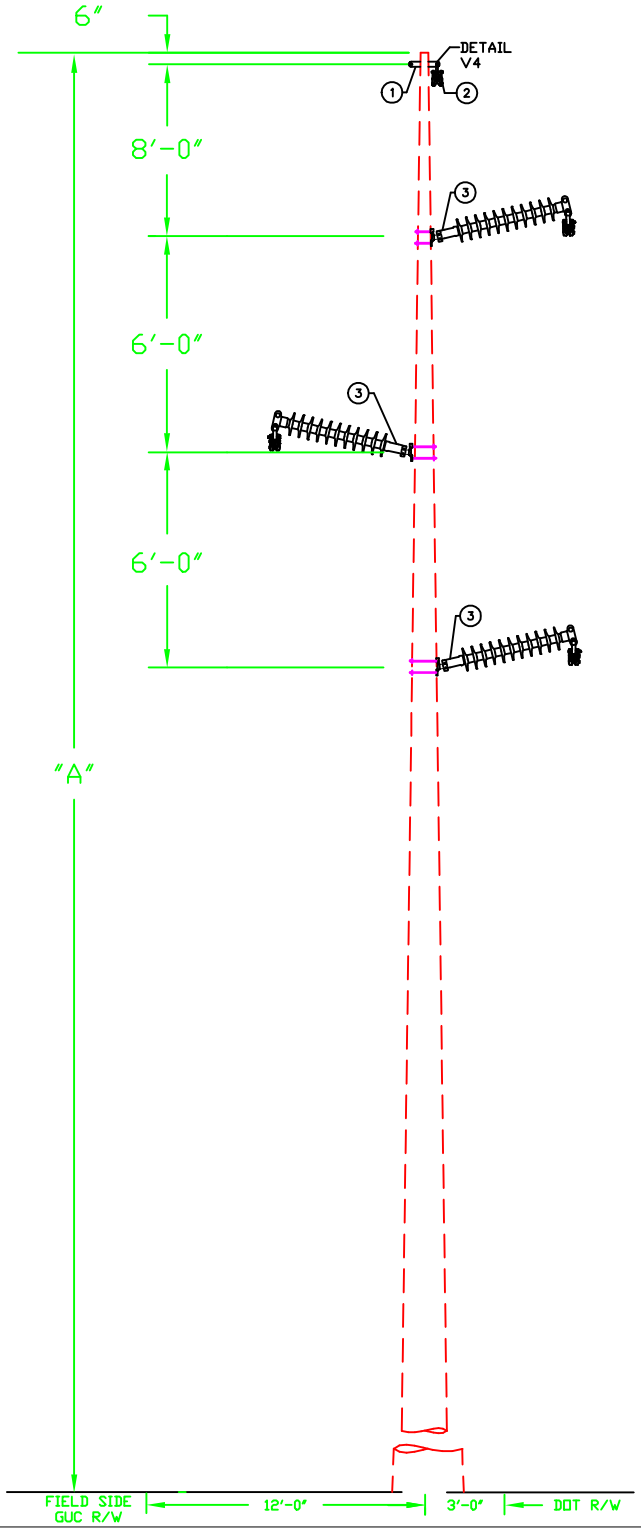

DWG. REF.	LIST OF MATERIALS			
	ea.	DESCRIPTION	ITEM	DET.
1	1	OHGW ASSEMBLY, TANGENT	–	TM–4A
2	1	OHGW GROUNDING ASSEMBLY	–	TM–9X(S)
3	3	115 KV POST INSULATOR ASSY	–	TM–3DM
	1	DRIVEN GROUND ROD ASSEMBLY	–	TM–9

GREENVILLE UTILITIES COMMISSION
GREENVILLE, NORTH CAROLINA

Greenville Utilities

Structure 18.5 Multi Structure
115 KV 3 PHASE, Z–FRAME STRUCTURE,
TANGENT, POST INSULATORS

DWN. DRB		DATE: 03/25/25	
CKD. JLS		APPD. JLS	
SCALE: N.T.S.		Page 1 of 2	
DATE	REVISION	DATE	REVISION

DWG. NO.
TPZ1

TPZ1 STRUCTURE DIMENSIONS			
POLE NUMBER	HEIGHT/CLASS	A	B
18.5, 18.6	85/S-07.4	74'-6"	10'-6"
18.8	90/5-08.0	79'-0"	11'-0"

GREENVILLE UTILITIES COMMISSION
GREENVILLE, NORTH CAROLINA

Greenville Utilities

18.5 MULTI STRUCTURE
TPZ1 STRUCTURE DIMENSIONS

DWN. DRB		DATE: 03/04/25		DWG. NO.
CKD. JLS		APPD. JLS		
SCALE: N.T.S.		PAGE 2 OF 2		TPZ1
DATE	REVISION	DATE	REVISION	

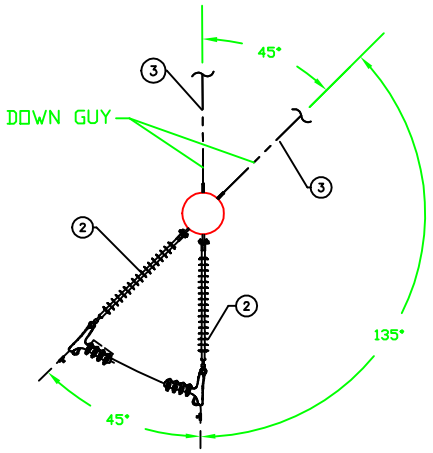

OVERHEAD VIEW

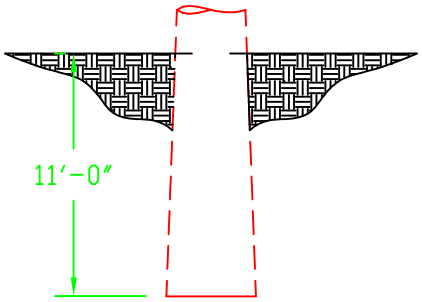

90' Structure Embedment

NOTE: DRAWING IS NOT TO SCALE. ALL DIMENSIONS ARE O.C. OF INSULATOR MOUNTS.

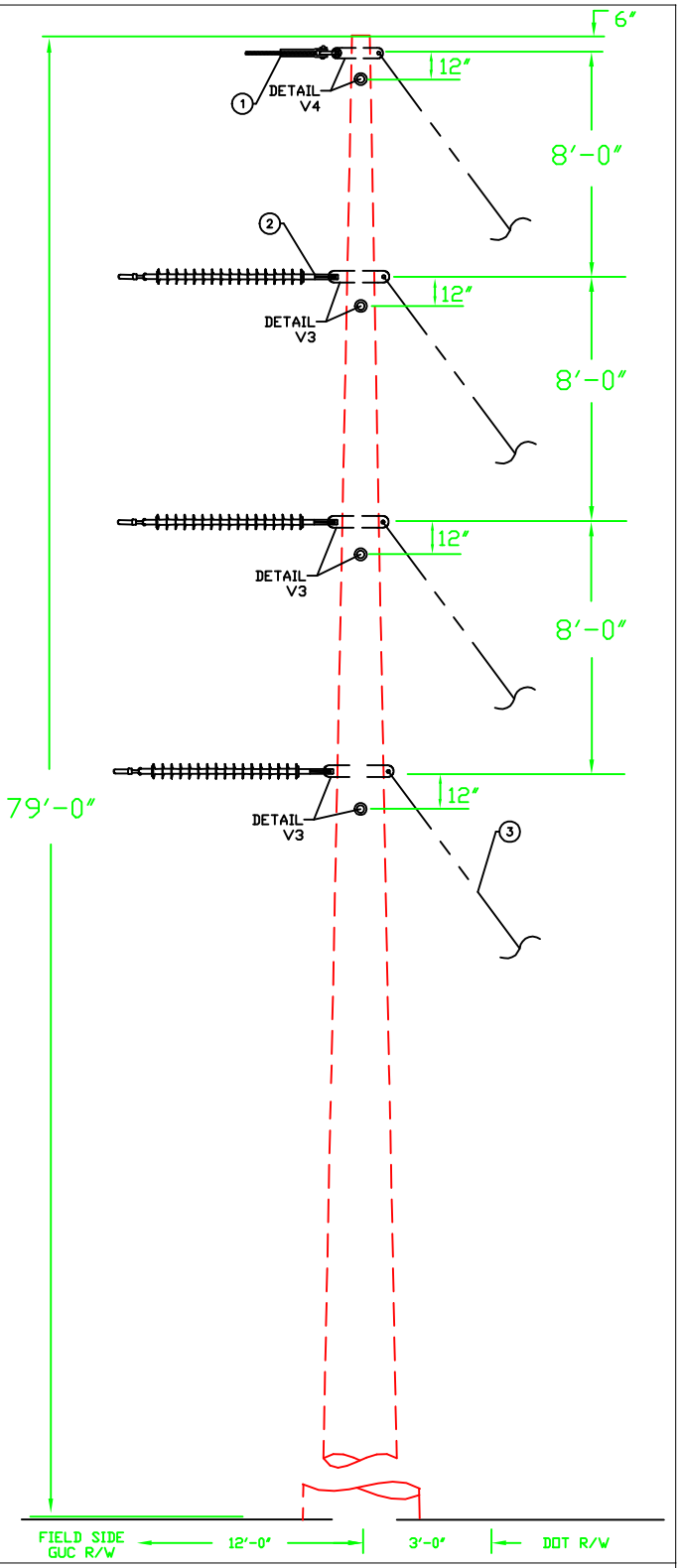

DWG. REF.	ea.	LIST OF MATERIALS DESCRIPTION	ITEM	DET.
1	2	OHGW ASSEMBLY, DEADEND	–	TM–4E
	1	OHGW GROUNDING ASSEMBLY	–	TM–9X(S)
2	6	DEADEND ASSEMBLY, PRIMARY	–	TM–1EM
3	8	SINGLE DOWN GUY	–	TG–21A
	8	ANCHOR ASSEMBLY, TRANSMISSION	–	TA–2H

GREENVILLE UTILITIES COMMISSION
GREENVILLE, NORTH CAROLINA

Greenville Utilities

Structure 18.7
115 KV 3 PHASE, VERTICAL STRUCTURE LARGE ANGLE, DOUBLE DEADEND SUSPENSION

DWN. DRB		DATE: 03/04/25	
CKD. JLS		APPD. KW	
SCALE: N.T.S.			
DATE	REVISION	DATE	REVISION

DWG. NO.

TSV4

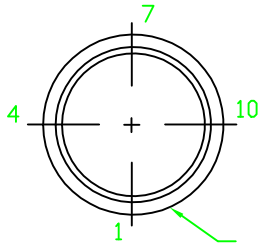

THRU HOLE BORING DETAIL		
DIAMETER	FROM SMALL END	FLAT#
13/16"	8'-0"	4
13/16"	9'-0"	4
13/16"	14'-0"	4
13/16"	15'-0"	4
13/16"	20'-0"	4
13/16"	21'-0"	4
11/16"	29'-0"	1
11/16"	30'-0"	1
11/16"	36'-0"	4

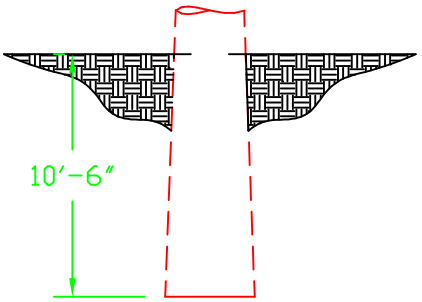

85' STRUCTURE EMBEDMENT

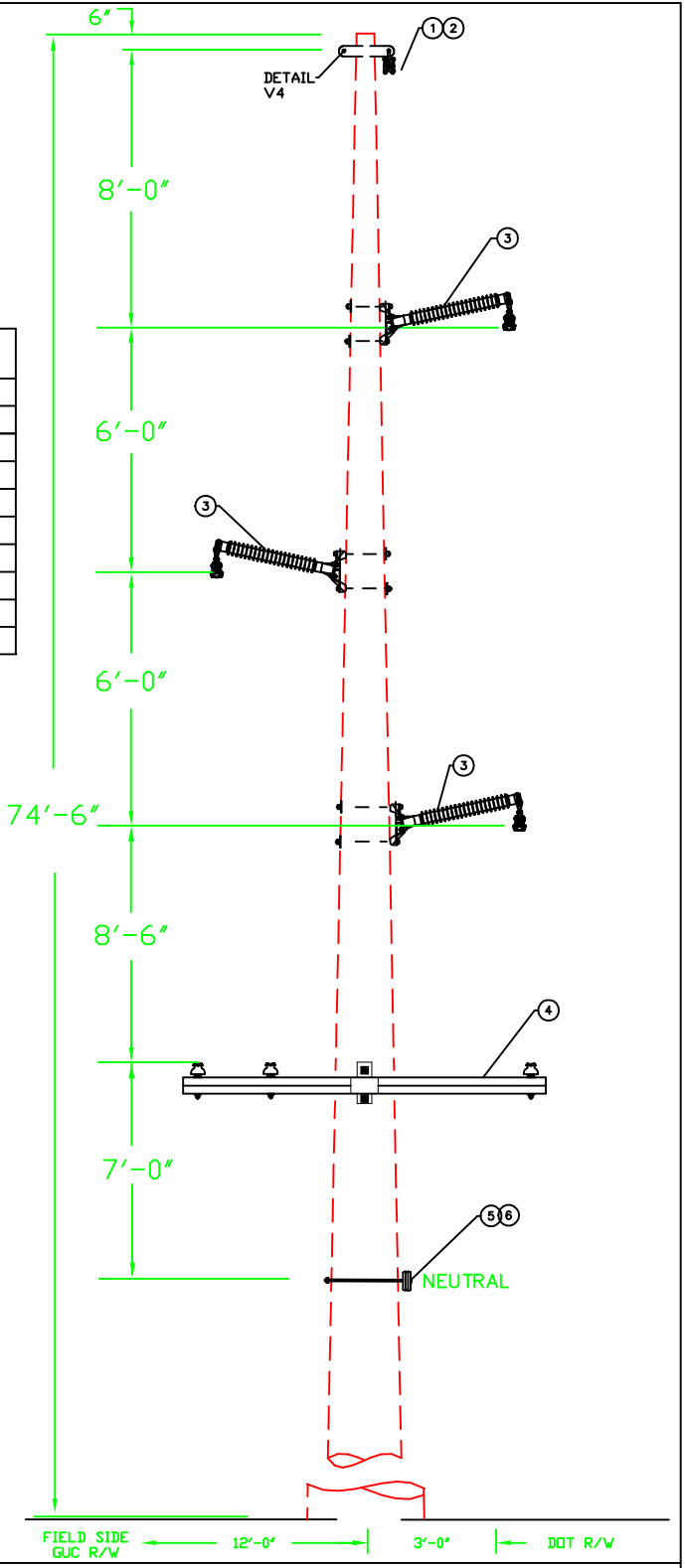

NOTES:

1) DRAWING IS NOT TO SCALE.

2) ALL DIMENSIONS ARE O.C. OF INSULATOR MOUNTS.

3) CROSSARM BRACE NOT SHOWN ON DRAWING.

DWG. REF.	ea.	LIST OF MATERIALS DESCRIPTION	ITEM	DET.
1	1	OHGW ASSEMBLY, TANGENT	–	TM-4A
2	1	OHGW GROUNDING ASSY	–	TM-9X(S)
3	3	115 KV POST INSULATOR ASSY	–	TM-3DM
4	1	10' TANGENT DISTRIBUTION XRM ASSY	–	XRM-10A
5	1	NEUTRAL GROUNDING ASSEMBLY	–	NG-336
6	1	NEUTRAL SPOOL ASSEMBLY	–	NS-336
	1	DRIVEN GROUND ROD ASSEMBLY	–	TM-9

GREENVILLE UTILITIES COMMISSION
GREENVILLE, NORTH CAROLINA

Greenville Utilities

18.9 MULTI STRUCTURE
115 KV 3 PHASE, Z-FRAME STRUCTURE,
TANGENT POST, W/DISTRIBUTION UB

DWN. DRB		DATE: 03/04/25	
CKD. JLS		APPD. JLS	
SCALE: N.T.S.		PAGE 1 OF 1	
DATE	REVISION	DATE	REVISION
–	–		

DWG. NO.

TPZ1.C1

TPZD1.C1 STRUCTURE DIMENSIONS			
POLE NUMBER	HEIGHT/CLASS	ABOVE GRADE	EMBEDMENT
18.9-18.12	90/S-08.0	79'-0"	11'-0"
18.13	85/S-07.4	74'-6"	10'-6"
18.17-18.19	85/S-0.74	74'-6"	10'-6"
18.21	85/S-07.4	74'-6"	10'-6"
18.23-18.27	85/S-07.4	74'-6"	10'-6"
18.30	85/S-07.4	74'-6"	10'-6"

DWG. REF.		LIST OF MATERIALS		
	ea.	DESCRIPTION	ITEM	DET.
			–	

GREENVILLE UTILITIES COMMISSION
GREENVILLE, NORTH CAROLINA

Greenville Utilities

18.9 MULTI STRUCTURE
TPZD1.C1 STRUCTURE DIMENSIONS

DWN. DRB		DATE: 03/04/25	
CKD. JLS		APPD. JLS	
SCALE: N.T.S.		PAGE 2 OF 2	
DATE	REVISION	DATE	REVISION

DWG. NO.

TPZ1.C1

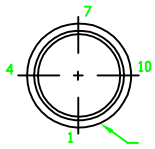

THRU HOLE BORING DETAIL		
DIAMETER	FROM SMALL END	FLAT#
13/16"	8'–0"	4
13/16"	9'–0"	4
13/16"	16'–0"	4
13/16"	17'–0"	4
13/16"	24'–0"	4
13/16"	25'–0"	4
11/16"	33'–0"	1
11/16"	34'–0"	1
11/16"	40'–0"	4

OVERHEAD VIEW

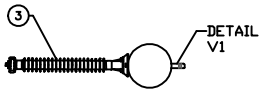

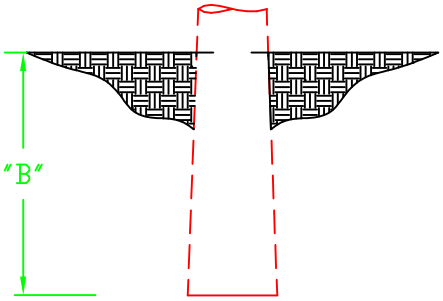

SEE CHART FOR EMBEDMENT DETAILS

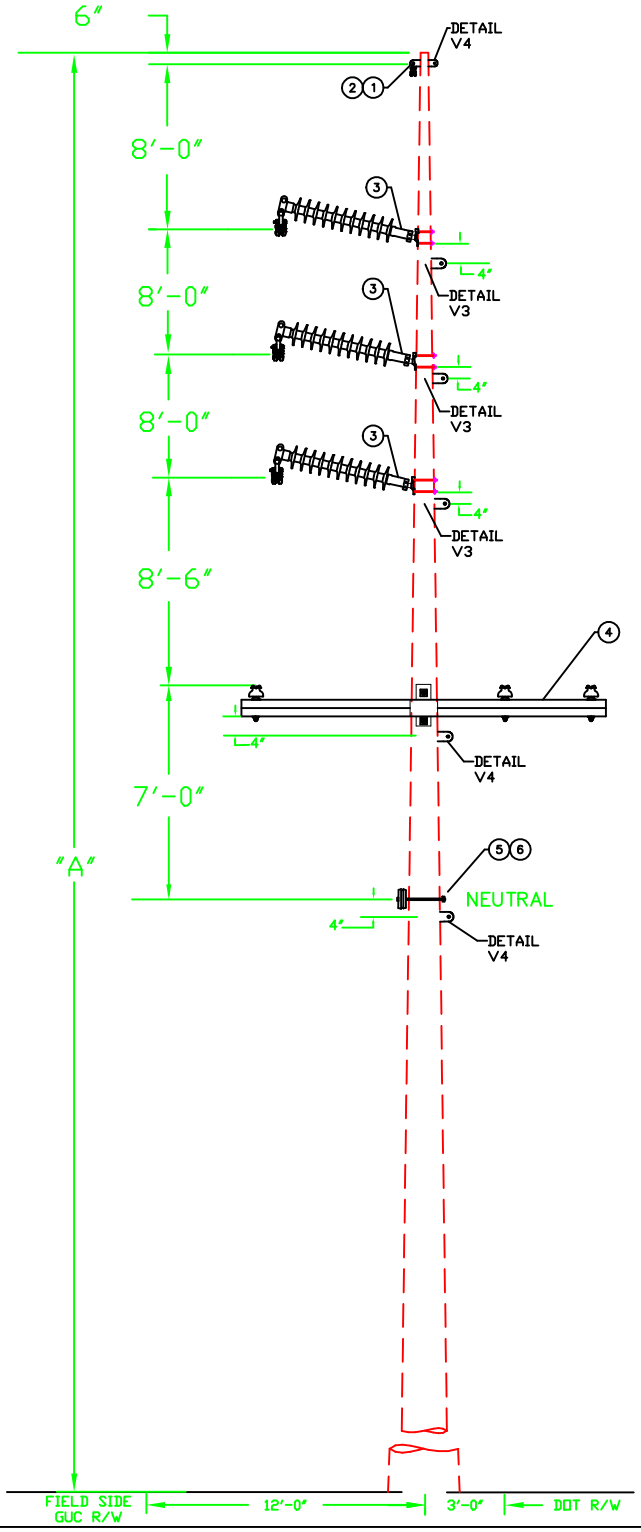

NOTE:

1) DRAWING IS NOT TO SCALE.
2) ALL DIMENSIONS ARE O.C. OF INSULATOR MOUNTS.
3) DOWNGUYS NOT SHOWN.
4) FIBER WILL BE FIELD DRILLED.
5) SECOND CROSSARM (NOT SHOWN) TO BE INSTALLED ON OPPOSITE SIDE USING SAME THRU HOLES.
6) ANGLE PINS TO BE INSTALLED ON CROSSARMS.

DWG. REF.		LIST OF MATERIALS		
	ea.	DESCRIPTION	ITEM	DET.
1	1	OHGW ASSEMBLY, TANGENT	–	TM–4A
2	1	OHGW GROUNDING ASSEMBLY	–	TM–9X(S)
3	3	115 KV POST INSULATOR ASSEMBLY	–	TM–3DM
4	2	TANGENT DISTRIBUTION CROSSARM	–	XRM–10A
5	1	NEUTRAL SPOOL ASSEMBLY	–	NS–336
6	1	NEUTRAL GROUNDING ASSEMBLY	–	NG–1
	1	DRIVEN GROUND ROD ASSEMBLY	–	TM–9
	8	SINGLE DOWN GUY	–	TG–21A
	8	ANCHOR ASSEMBLY, TRANSMISSION	–	TA–2H

GREENVILLE UTILITIES COMMISSION
GREENVILLE, NORTH CAROLINA

Greenville Utilities

18.14 (MULTI STRUCTURES)
115 KV 3 PHASE, VERT FRAME STRUCTURE, TANGENT, POST INSULATORS, WITH DISTRIBUTION UNDERBUILD ON CROSSSARM

DWN. DRB		DATE: 03/17/2025	
CKD. JLS		APPD. JLS	
SCALE: N.T.S.		PAGE 1 OF 2	
DATE	REVISION	DATE	REVISION

DWG. NO.
TPV1.C2

TPVD1.C2 STRUCTURE DIMENSIONS			
POLE NUMBER	HEIGHT/CLASS	ABOVE GRADE	EMBEDMENT
18.20	85/S-07.4	74'-6"	10'-6"
18.14, 18.28	90/S-08.0	79'-0"	11'-0"

DWG. REF.		LIST OF MATERIALS		
	ea.	DESCRIPTION	ITEM	DET.
			–	

GREENVILLE UTILITIES COMMISSION
GREENVILLE, NORTH CAROLINA

Greenville Utilities

18.14 MULTI STRUCTURE
TPVD1.C2 STRUCTURE DIMENSIONS

DWN. DRB		DATE: 03/04/25	
CKD. JLS		APPD. JLS	
SCALE: N.T.S.		PAGE 2 OF 2	
DATE	REVISION	DATE	REVISION

DWG. NO.

TPV1.C2

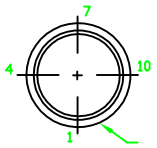

THRU HOLE BORING DETAIL		
DIAMETER	FROM SMALL END	FLAT#
13/16"	8'–0"	4
13/16"	9'–0"	4
13/16"	14'–0"	4
13/16"	15'–0"	4
13/16"	20'–0"	4
13/16"	21'–0"	4

NOTE: DRAWING IS NOT TO SCALE. ALL DIMENSIONS ARE O.C. OF INSULATOR MOUNTS.

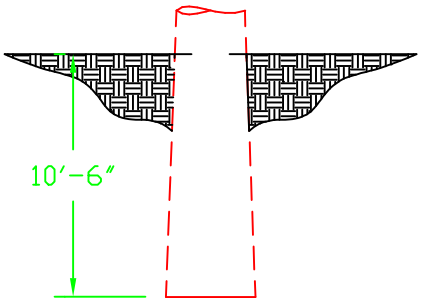

85' STRUCTURE EMBEDMENT

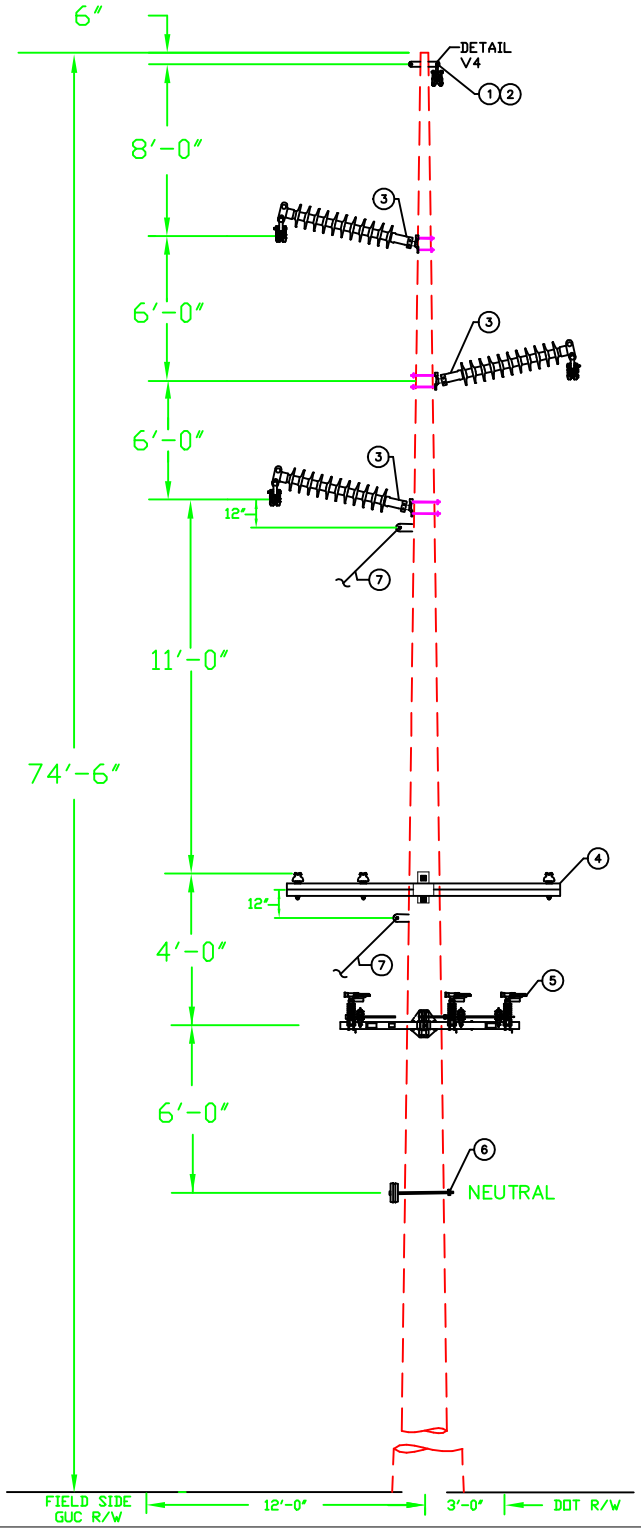

1. HORIZONTAL GANGSWITCH AND NEUTRAL ATTACHMENT WILL BE FIELD DRILLED.
2. SIDEWALK GUY NOT SHOWN.

DWG. REF.	LIST OF MATERIALS			
	ea.	DESCRIPTION	ITEM	DET.
1	1	OHGW ASSEMBLY, TANGENT	–	TM–4A
2	1	OHGW GROUNDING ASSEMBLY	–	TM–9X(S)
3	3	115 KV POST INSULATOR ASSY	–	TM–3DM
4	1	TANGENT CROSSARM ASSEMBLY	–	XRM–10A
5	1	HORIZONTAL GANGSWITCH	–	
6	1	NEUTRAL SPOOL ASSEMBLY	–	NS–1
	1	SIDEWALK GUY ASSEMBLY	–	SWG–36
7	2	DOWNGUY ASSEMBLY	–	TA–2H
	1	DRIVEN GROUND ROD ASSEMBLY	–	TM–9

GREENVILLE UTILITIES COMMISSION
GREENVILLE, NORTH CAROLINA

Greenville Utilities

Structure 18.15, 18.16
115 KV 3 PHASE, Z–FRAME STRUCTURE, TANGENT, POST INSULATORS, DISTRIBUTION UNDERBUILD WITH HORIZONTAL GANGSWITCH

DWN. DRB		DATE: 10/31/25	
CKD. JLS		APPD. JLS	
SCALE: N.T.S.		Page 1 of 2	
DATE	REVISION	DATE	REVISION

DWG. NO.
TPZ1.C1

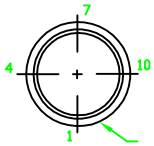

THRU HOLE BORING DETAIL		
DIAMETER	FROM SMALL END	FLAT#
13/16"	8'–0"	4
13/16"	9'–0"	4
13/16"	16'–0"	4
13/16"	17'–0"	4
13/16"	24'–0"	4
13/16"	25'–0"	4

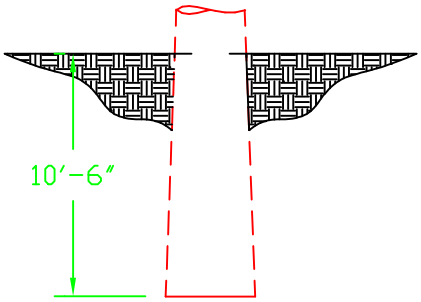

85' STRUCTURE EMBEDMENT

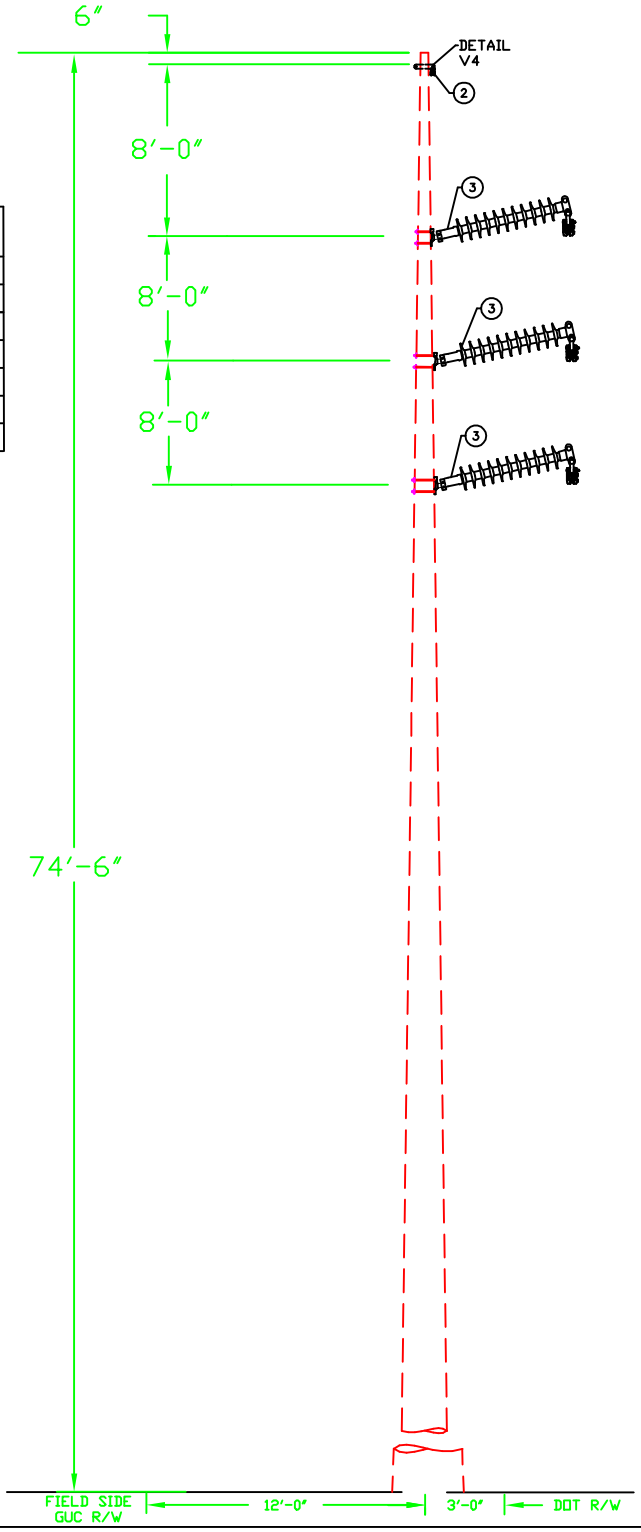

NOTE:

1) DRAWING IS NOT TO SCALE.
2) ALL DIMENSIONS ARE O.C. OF INSULATOR MOUNTS.
3) FIBER WILL BE FIELD DRILLED.
4) VERTICAL GANGSWITCH (NOT SHOWN) WILL BE FIELD DRILLED
5) DISTRIBUTION AND NEUTRAL WILL BE FIELD–DRILLED.

DWG. REF.	LIST OF MATERIALS			
	ea.	DESCRIPTION	ITEM	DET.
1	1	OHGW ASSEMBLY, TANGENT	–	TM–4A
2	1	OHGW GROUNDING ASSEMBLY	–	TM–9X(S)
3	3	115 KV POST INSULATOR, TANGENT	–	TM–3DM
4	1	VERTICAL GANGSWITCH	–	
5	12	SUSPENSION INSULATOR DEADEND	–	DM–1EM
6	4	NEUTRAL DEADEND	–	NDE–336
7	2	NEUTRAL GROUNDING ASSEMBLY	–	NG–1
	1	DRIVEN GROUND ROD ASSEMBLY	–	TM–9

GREENVILLE UTILITIES COMMISSION
GREENVILLE, NORTH CAROLINA

Greenville Utilities

STRUCTURE 18.22
115 KV 3 PHASE, VERTICAL FRAME
STRUCTURE, TANGENT, POST INSULATORS,
WITH VERTICAL DDE DISTRIBUTION

DWN. DRB		DATE: 11/3/2025	
CKD. JLS		APPD. JLS	
SCALE: N.T.S.			
DATE	REVISION	DATE	REVISION

DWG. NO.

TPV1.DV4

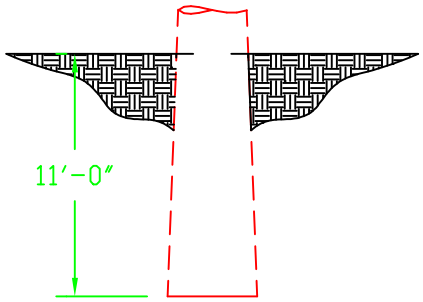

90' STRUCTURE EMBEDMENT

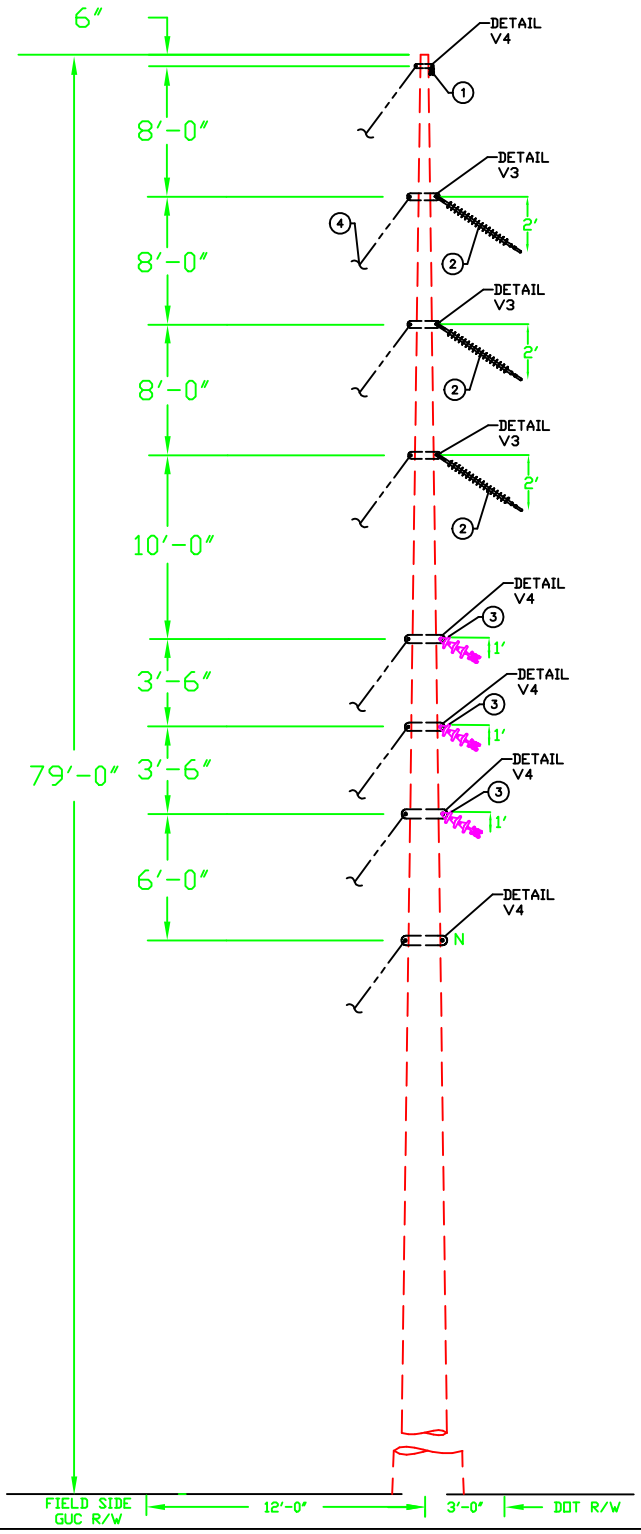

NOTES:

1) DRAWING IS NOT TO SCALE.
2) ALL DIMENSIONS ARE O.C. OF INSULATOR MOUNTS.

DWG. REF.	LIST OF MATERIALS			
	ea.	DESCRIPTION	ITEM	DET.
1	1	OHGW ASSEMBLY, ANGLE	–	TM–4A
	1	OHGW GROUNDING ASSEMBLY	–	TM–9X(S)
2	3	ANGLE ASSEMBLY, PRIMARY	–	TM–1CM
3	3	ANGLE ASSEMBLY, SECONDARY	–	DM–1CM
4	8	SINGLE DOWN GUY	–	TG–21A
5	1	TANGENT NEUTRAL ON VANG	–	N–336
6	1	NEUTRAL GROUNDING ASSEMBLY	–	NG–336
	1	DRIVEN GROUND ROD ASSEMBLY	–	TM–9
	8	ANCHOR ASSEMBLY, TRANSMISSION	–	TA–2H

GREENVILLE UTILITIES COMMISSION
GREENVILLE, NORTH CAROLINA

Greenville Utilities

STRUCTURE 18.29
115 KV 3 PHASE, VERTICAL DOUBLE CIRCUIT STRUCTURE, LARGE ANGLE, SUSPENSION

DWN. DRB		DATE: 10/31/2025	
CKD. JLS		APPD. JLS	
SCALE: N.T.S.			
DATE	REVISION	DATE	REVISION

DWG. NO.

TSV3.V3

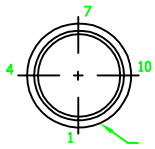

THRU HOLE BORING DETAIL		
DIAMETER	FROM SMALL END	FLAT#
13/16"	8'–0"	4
13/16"	9'–0"	4
13/16"	14'–0"	4
13/16"	15'–0"	4
13/16"	20'–0"	4
13/16"	21'–0"	4
11/16"	29'–0"	1
11/16"	30'–0"	1

OVERHEAD VIEW

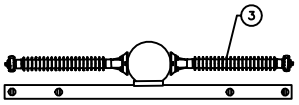

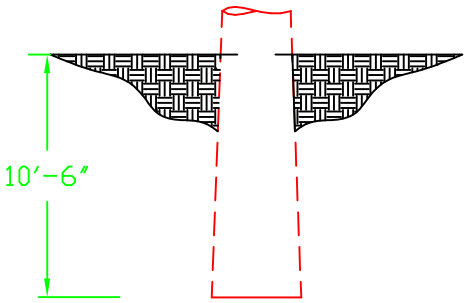

85' STRUCTURE EMBEDMENT

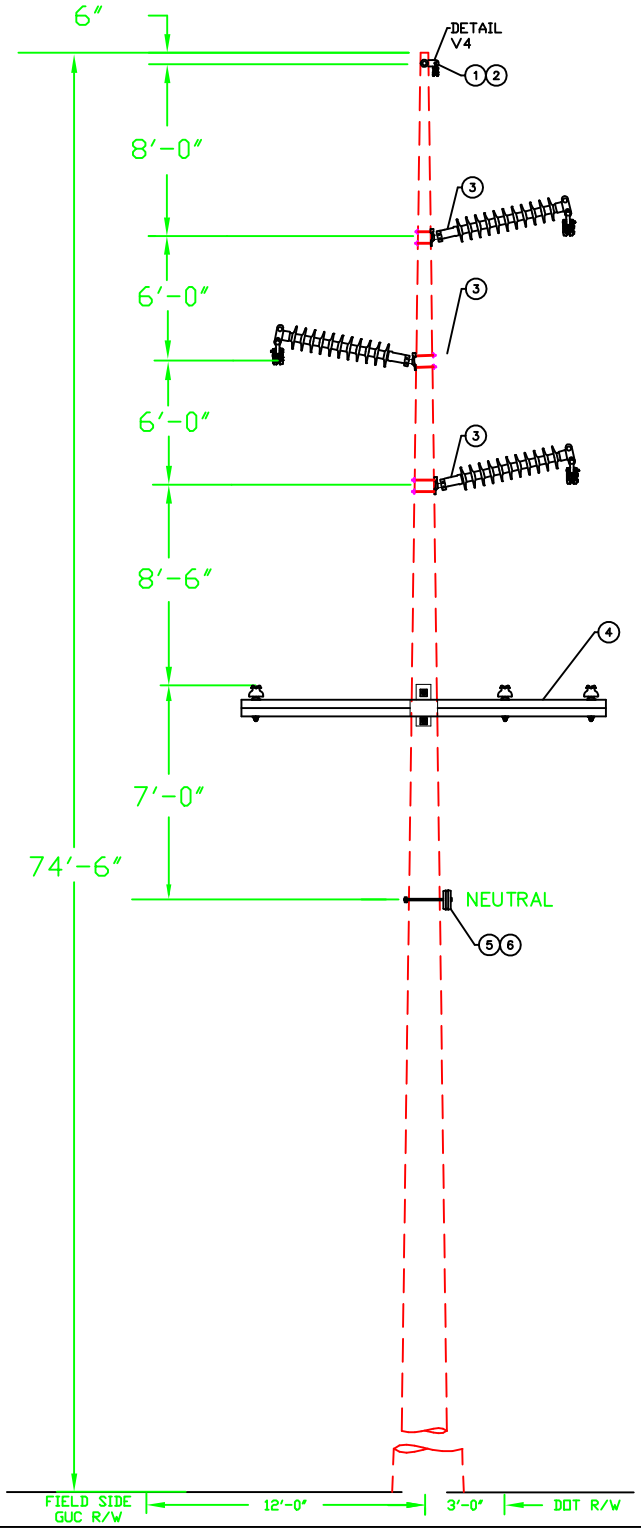

NOTE:

1) DRAWING IS NOT TO SCALE.
2) ALL DIMENSIONS ARE O.C. OF INSULATOR MOUNTS.
3) DOWNGUYS NOT SHOWN.
4) FIBER WILL BE FIELD DRILLED.
5) SECOND CROSSARM (NOT SHOWN) TO BE INSTALLED ON OPPOSITE SIDE USING SAME THRU HOLES.
6) ANGLE PINS TO BE INSTALLED ON CROSSARMS.

DWG. REF.		LIST OF MATERIALS		
	ea.	DESCRIPTION	ITEM	DET.
1	1	OHGW ASSEMBLY, TANGENT	–	TM–4A
2	1	OHGW GROUNDING ASSEMBLY	–	TM–9X(S)
3	3	115 KV POST INSULATOR ASSEMBLY	–	TM–3DM
4	2	TANGENT DISTRIBUTION CROSSARM	–	XRM–10A
5	1	NEUTRAL SPOOL ASSEMBLY	–	NS–336
6	1	NEUTRAL GROUNDING ASSEMBLY	–	NG–1
	1	DRIVEN GROUND ROD ASSEMBLY	–	TM–9

GREENVILLE UTILITIES COMMISSION
GREENVILLE, NORTH CAROLINA

Greenville Utilities

18.31
115 KV 3 PHASE, Z FRAME STRUCTURE, TANGENT, POST INSULATORS, WITH DISTRIBUTION UNDERBUILD ON CROSSSARM

DWN. DRB		DATE: 03/17/2025	
CKD. JLS		APPD. JLS	
SCALE: N.T.S.		PAGE 1 OF 2	
DATE	REVISION	DATE	REVISION

DWG. NO.
TPZ1.C2

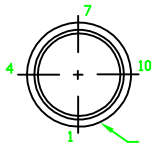

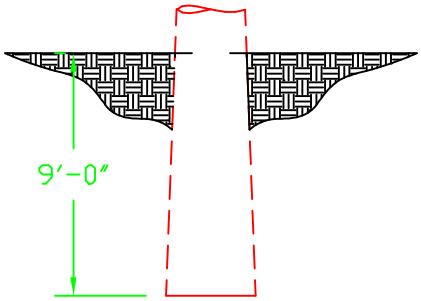

70' STRUCTURE EMBEDMENT

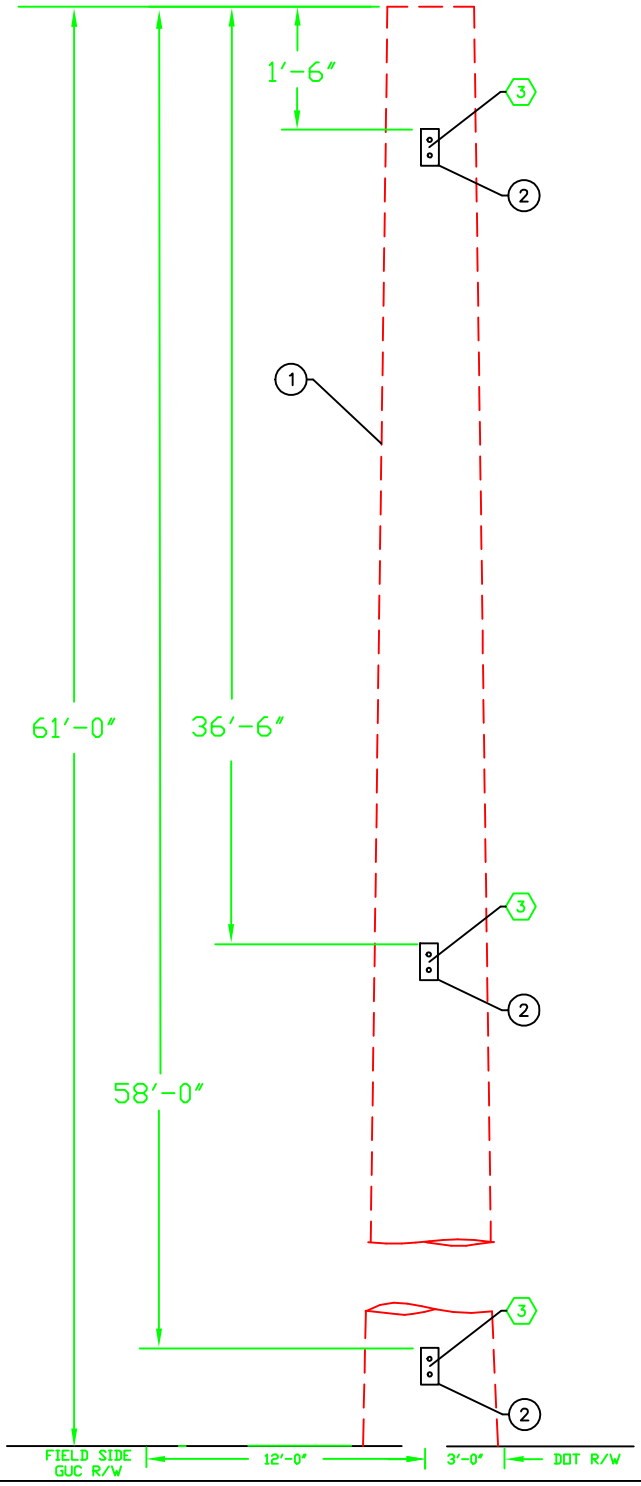

NOTES:

1) DRAWING IS NOT TO SCALE.

2) SEE PG 2 FOR DIMENSIONS "A", "B", "C" & "D".

3 REFER TO DRAWING TG-C FOR GROUNDING PAD DETAILS.

DWG. REF.	LIST OF MATERIALS			
	ea.	DESCRIPTION	ITEM	DET.
	1	GALVANIZED STEEL POLE	–	
	3	2-BOLT NEMA GROUNDING PAD	–	

GREENVILLE UTILITIES COMMISSION
GREENVILLE, NORTH CAROLINA

Greenville Utilities

GALVANIZED STEEL POLES
BLANK

DWN. DRB		DATE: 9/4/2025	
CKD. JLS		APPD. JLS	
SCALE: N.T.S.		PAGE 1 OF 2	
DATE	REVISION	DATE	REVISION

DWG. NO.
SP-70

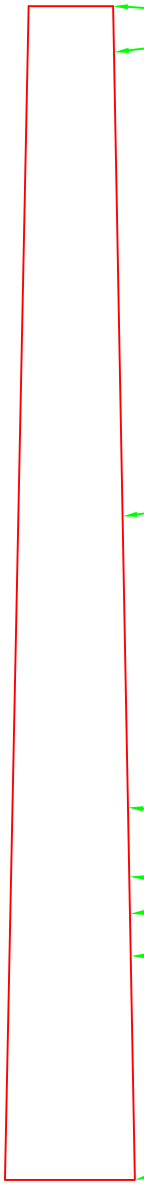

LOCATION DIMENSION			
FROM LARGE END	FROM SMALL END	TOLERANCES BLANK–M–1	DETAIL
	0'–0.00"		7
	1'–6.00"		4
1'–6.00"	BELOW NEUTRAL		4
5'–0"	ABOVE GL		5
3'–0"	ABOVE GL		4
2'–0"	ABOVE GL		3
NOTE 2			2
NOTE 2			GL
0'–00"			

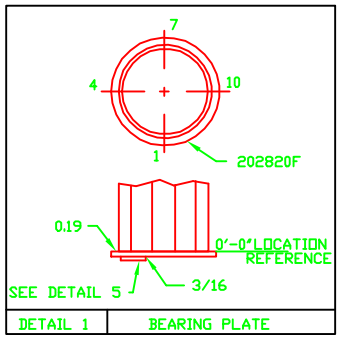

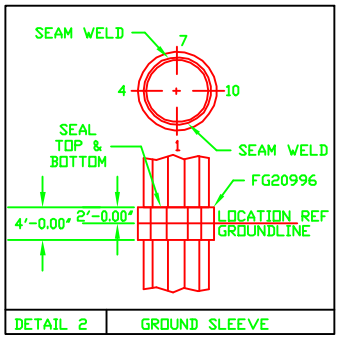

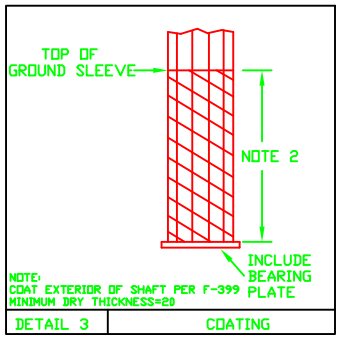

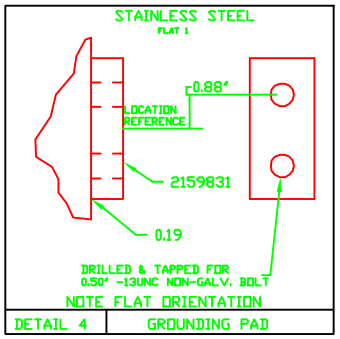

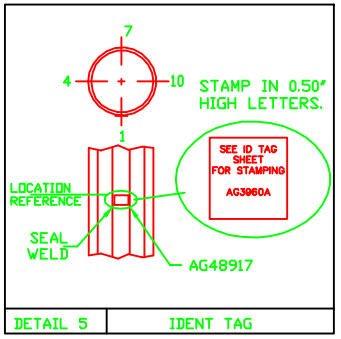

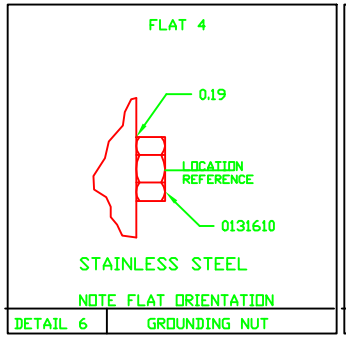

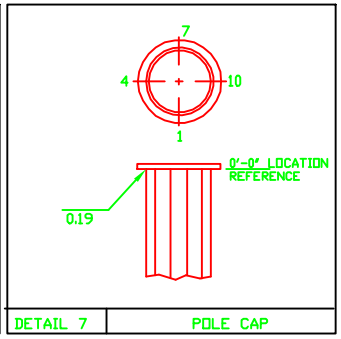

NOTE:

1. DIMENSIONS IN THE DRAWING ARE NOT TRUE TO PROPORTION.
2. SEE STRUCTURE DRAWINGS FOR EMBEDMENT AND POLE HEIGHT DIMENSIONS.

NOTES:

1. FLATS 1 AND 12 ARE ADJACENT TO SEAM WELD
2. ALL CROSS SECTION VIEWS ARE FROM SMALL END OF TUBE.
3. POLE TUBE DATA REF MATERIAL=S–99

TUBE LENGTH	END OD (IN) LARGE	END OD (IN) SMALL	THICKNESS (IN)
NOTE 2			

TUBE DIAMETERS MEASURED ACROSS FLATS.

GREENVILLE UTILITIES COMMISSION
GREENVILLE, NORTH CAROLINA

Greenville Utilities

GROUNDING AND COATINGS DETAIL

DWN. JLS		DATE: 02/11/2022	
CKD. JLS		APPD. JLS	
SCALE: N.T.S.			
DATE	REVISION	DATE	REVISION

DWG. NO.

TG–C

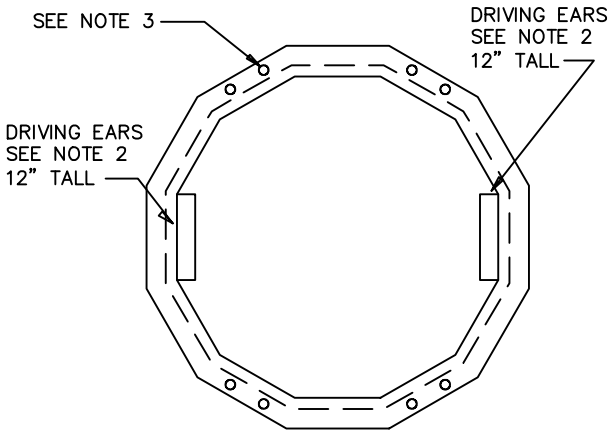

SECTION A–A

N.T.S

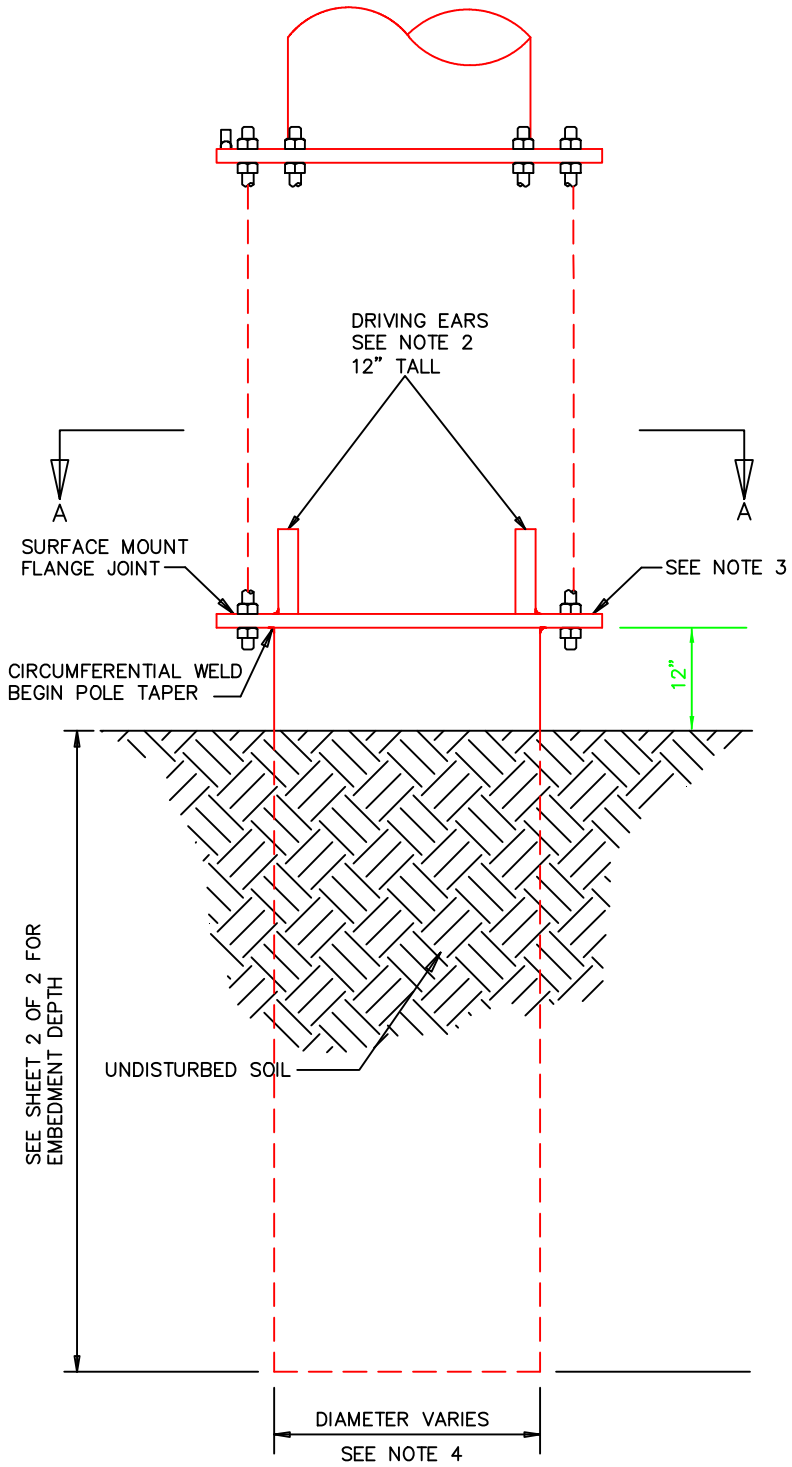

NOTES:

1. VIBRATORY POLE BASE TO BE INSTALLED USING VIBRATORY HAMMER, THE FREQUENCY AND STROKE AMPLITUDE RANGES FOR INSTALLATION OF THE POLE BASE TO BE PER MANUFACTURERS RECOMMENDATIONS.
2. MANUFACTURER SHALL DETERMINE ADEQUATE SIZE OF DRIVING EARS.
3. FLANGE SIZE AND BOLT PATTERN TO BE DETERMINED BY MANUFACTURER. BOLT PATTERN OF POLE TO MATCH BOLT PATTERN OF FOUNDATION FLANGE JOINT.
4. VIBRATORY BASE DIAMETERS AND DEPTHS SHOWN ON SHEET 2 OF 2 ARE MINIMUM. POLE MANUFACTURER IS TO VERIFY VIBRATORY POLE BASE IS ADEQUATE FOR DESIGN LOADS.

DWG. REF.	ea.	LIST OF MATERIALS DESCRIPTION	ITEM	DET.
	1	VIBRATORY POLE BASE, FLANGE MOUNT	–	

GREENVILLE UTILITIES COMMISSION
GREENVILLE, NORTH CAROLINA

Greenville Utilities

VIBRATORY DRIVEN POLE BASE
FLANGE TYPE

DWN. DRB		DATE: 5/29/2026	
CKD. JLS		APPD. DRB	
SCALE: N.T.S.		SHEET: 1 OF 2	
DATE	REVISION	DATE	REVISION

DWG. NO.

TMF–VPB–F

115 KV TRANSMISSION SUGG PARKWAY			
POLE NUMBER	HEIGHT/CLASS	MINIMUM EMBEDMENT DEPTH	VIBRATORY BASE MINIMUM DIAMETER
11.1	75/ENG	27'-0"	5'
11.2	75/ENG	27'-0"	4.5'

NOTES:

1. EMBEDMENT DEPTHS AND DIAMETERS ARE MINIMUM REQUIREMENTS FOR EXISTING SOIL CONDITIONS.

DWG. REF.		LIST OF MATERIALS		
	ea.	DESCRIPTION	ITEM	DET.
	1	VIBRATORY POLE BASE	–	

GREENVILLE UTILITIES COMMISSION
GREENVILLE, NORTH CAROLINA

Greenville Utilities

VIBRATORY DRIVEN POLE BASE
FLANGE TYPE

DWN. DRB		DATE: 5/29/2026	
CKD. JLS		APPD. JLS	
SCALE: N.T.S.		SHEET: 2 OF 2	
DATE	REVISION	DATE	REVISION

DWG. NO.

TMF–VPB–F

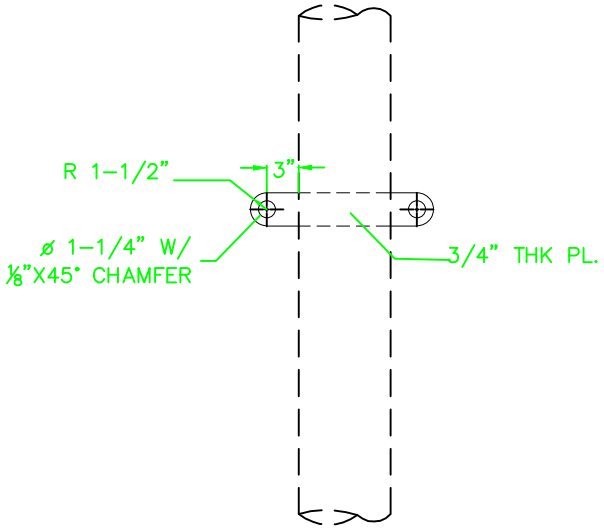

STEEL POLE THRU VANG

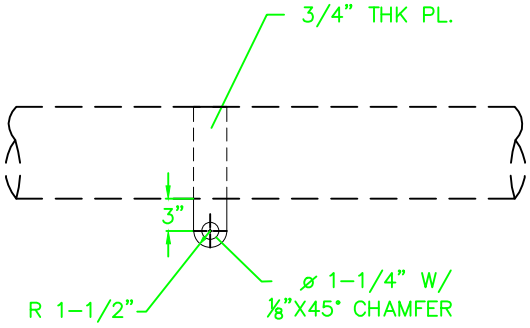

CROSSARM THRU VANG

DWG. REF.	LIST OF MATERIALS	
	ea.	DESCRIPTION

GREENVILLE UTILITIES COMMISSION
GREENVILLE, NORTH CAROLINA

Greenville Utilities

STEEL POLE/CROSSARM THRU VANG

DWN. JLS		DATE: 04/01/19	
CKD. KW		APPD. KW	
SCALE: N.T.S.			
DATE		DATE	REVISION

DWG. NO.

TV-1

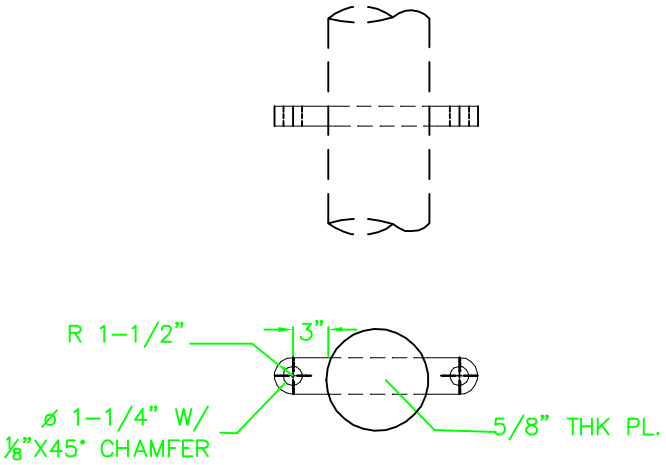

DETAIL V1
HORIZONTAL OHGW/DISTRIBUTION VANG

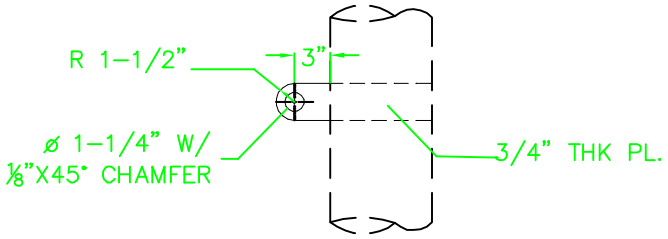

DETAIL V2
VERTICAL TRANSMISSION VANG (1-SIDED)

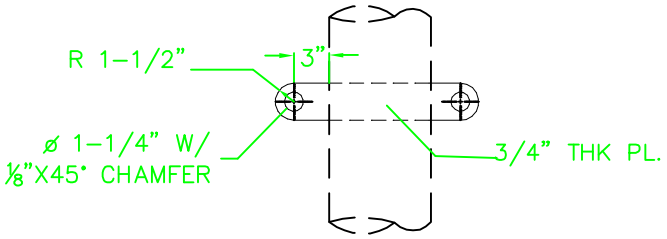

DETAIL V3
VERTICAL TRANSMISSION VANG

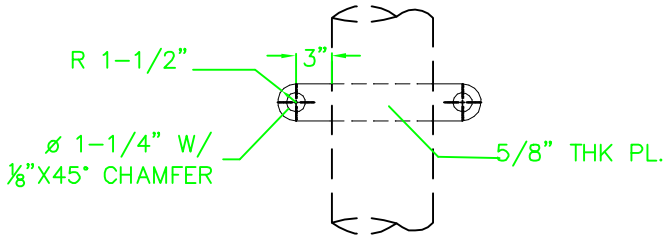

DETAIL V4
VERTICAL OHGW/DISTRIBUTION VANG

DWG. REF.	LIST OF MATERIALS		GREENVILLE UTILITIES COMMISSION GREENVILLE, NORTH CAROLINA			
	ea.	DESCRIPTION	Greenville Utilities	VANG DETAILS		
			DWN. JLS		DATE: 02/11/2022	DWG. NO.
			CKD. JLS		APPD. JLS	
			SCALE: N.T.S.			
			DATE		DATE	REVISION
						TV-2

Attachment C, Structure Weights and Costs

Structure Weights and Costs						
Structure #	**Pole Height (ft.)**	**RUS Class**	**Structure Weight (lb)**	**Structure Cost**	**Total Weight (lb)**	**Total Cost**
11.1 (with Caisson)	70	ENGR		$		$
11.2 (with Caisson)	65	ENGR		$		$
11.3	70	S-06.5		$		$
18.1 - 18.3	90	S-08.0		$		$
18.4	85	S-07.4		$		$
18.5	85	S-07.4		$		$
18.6	85	S-07.4		$		$
18.7	90	S-08.0		$		$
18.8	90	S-08.0		$		$
18.9	90	S-08.0		$		$
18.10, 18.11	80	S-07.4		$		$
18.12	75	S-06.5		$		$
18.13	85	S-07.4		$		$
18.14	90	S-08.0		$		$
18.15	85	S-07.4		$		$
18.16	85	S-07.4		$		$
18.17	85	S-07.4		$		$
18.18	85	S-07.4		$		$
18.19	85	S-07.4		$		$
18.20	85	S-07.4		$		$
18.21	85	S-07.4		$		$
18.22	85	S-07.4		$		$
18.23	85	S-07.4		$		$
18.24	85	S-07.4		$		$
18.25	85	S-07.4		$		$
18.26	85	S-07.4		$		$
18.27	85	S-07.4		$		$
18.28	90	S-08.0		$		$
18.29	85	S-07.4		$		$
18.30	85	S-07.4		$		$
18.31	85	S-07.4		$		$
Blank (3)	70	S-07.5		$		$
				Totals		$

Attachment D, Bid Summary-Design Information, and Weights

POLE DESIGN											
DESCRIPTION		STRUCTURE HEIGHT									
DIAMETER TAPER (IN/FT), 1ST SECT.											
DIAMETER TAPER (IN/FT), 2ND SECT.											
BOTTOM DIAMETER											
TOP DIAMETER											
CROSS SECTION TYPE											
MATERIAL THICKNESS (IN),1ST SEC											
MATERIAL THICKNESS (IN),2ND SEC											
ASTM	MATERIAL										
	GRADE										
GOVERNING LOAD CASE(S)											
MAX. MOMENT AT GROUNDLINE											
MAX. SHEAR AT GROUNDLINE											
MAX. AXIAL LOAD AT GROUNDLINE											
MAX. LOAD IN GUY											
ANCHOR BOLTS	SIZE/SPACING										
	LENGTH										
	CAGE DIAMETER										

ARM DESIGN											
DESCRIPTION		ARM TYPE AND DATA									
		A	B	C	D	E	F			OHGW	
TAPER (IN/FT)											
END DIAMETER (IN)											
DIAMETER AT POLE (IN)											
CROSS SECTION TYPE											
ASTM	MATERIAL										
	GRADE										
GOVERNING LOAD CASE(S)											
MOMENT AT THE POLE (KIP-FT)											
GOVERNING LOAD CASE(S)											
MOMENT AT THE POLE (KIP-FT)											

SUMMARY										
ITEMS	STRUCTURE HEIGHTS									
WEIGHT OF ARMS (TOTAL)										
WEIGHT OF POLE										
WEIGht OF ANCHOR BOLTS										
TOTAL WEIGHT PER STRUCTURE										
TOTAL COST PER STRUCTURE										
NUMBER OF STRUCTURES										
TOTAL WEIGHTS										
TOTAL COSTS										

COMMENTS

TRANSMISSION LINE STRUCTURE

ATTACHMENT E

BID SUMMARY - DESIGN, WEIGHTS, AND COSTS

(information to be supplied with proposal)

SUBMIT BIDS ON ATTACHED PROPOSAL FORM

SPECIFICATIONS FOR TUBULAR STEEL STRUCTURES

In the space below, please provide a price quote for the following Tubular Steel Structures per the attached specifications. If your firm is unable to furnish this Tubular Steel Structures in accordance with our specifications and you wish to offer a substitute, please provide us with full details of the approved equivalent.

Item No.	Estimated Quantity	Description	Delivery Time	Unit Price	Extension
I	**37**	Tubular Steel Structures	_____	$_____	$_____

Method of Award: Items I will be awarded as a total bid.

Complete and Check All Math: It is the responsibility of the Bidder to extend bid prices and supply a total for all items. It is certified that this proposal is made in good faith and without collusion or connection with any other person bidding on the same above listed items. It is also certified that this proposal is made in good faith and without collusion or connection with any GUC employee(s).

The Undersigned Bidder: hereby declares that it has carefully examined the enclosed detailed specifications for furnishing GUC with the below listed items. The undersigned bidder further agrees, if this proposal is accepted within thirty (30) days from the date of the opening, to furnish any or all of the items upon the quoted price.

[Balance of page left blank intentionally]

It is certified that this proposal is made in good faith and without collusion or connection with any other person bidding on the same above listed items. It is also certified that this proposal is made in good faith and without collusion or connection with any GUC employee(s).

Each Proposal shall be accompanied by cash, cashier's check, or certified check drawn on a bank insured with the Federal Deposit Insurance Corporation or the Savings Association Insurance Fund, payable to the Owner, in an amount not less than five percent (5%) of the total bid as a guarantee that a Purchase Order, if awarded, will be accepted. In lieu thereof, a Bid Bond may be submitted by the Bidder in an amount not less than five percent (5%) of the total bid (see attached Bid Bond form). The total bid price for which the five percent (5%) applies shall be the total of all schedules.

Certified check or cash for **$**_____or bid bond for **$**_____attached.

Firm Name _____ Phone (_____)_____

Address_____

City _____ State _____ Zip Code _____

Fax (_____) _____ E-Mail _____

Authorized Official _____ Title _____
Typed Name

_____ Date _____
Signature

Two (2) hard copies and One (1) Electronic copy of your proposal should be received

No later than AUGUST 25, 2026 at 2:00 pm (EST).

NO BIDS CONSIDERED UNLESS SUBMITTED ON THIS FORM(S)

RETURN ONLY BID SECURITY, THIS FORM, COST FORM, EXCEPTION FORM,

E-VERIFY FORM(S)

BID BOND

KNOW ALL MEN BY THESE PRESENT, THAT WE _____
_____
_____
as Principal, and _____
____
as Surety, who is duly licensed to act as Surety in North Carolina, are held and firmly bound unto the Greenville Utilities Commission, Greenville, NC, as Obligee, in the penal sum of _____ DOLLARS ($ _____) (5% Bid Bond), lawful money of the United States of America, for the payment of which, well and truly to be made, we bind ourselves, our heirs, administrators, successors and assigns, jointly and severally, firmly by these present.

SIGNED, Sealed and dated this _____day of _____, 2026.

WHEREAS, the said Principal is herewith submitting a Proposal for

Galvanized Tubular Steel Structures

and the Principal desires to file this Bid Bond in Lieu of making the cash deposit as required by the bidding documents contained herein;

NOW, THEREFORE, THE CONDITION OF THE ABOVE OBLIGATION is such that if the principal shall be awarded the Purchase Order for which the bid is submitted and shall accept the Purchase Order within ten (10) days after the award of same to the principal, then this obligation shall be null and void; but if the principal fails to so accept such purchase order as required by the bidding documents contained herein, the Surety shall, upon demand, forthwith pay to the Obligee the amount set forth in the first paragraph hereof, and upon failure to forthwith make such payment, the Surety shall pay the Obligee an amount equal to double the amount of this Bid Bond as set forth in the first paragraph hereof. Power of Attorney from the surety to is Attorney-in-Fact is attached hereto.

_____
Principal

By _____(SEAL)

_____
Corporate Surety

By _____(SEAL)

GREENVILLE UTILITIES COMMISSION

EXCEPTION/VARIATION FORM

FOR TUBULAR STEEL STRUCTURES

Provider's Certification: This is to certify that it is our intent to furnish equipment, material, services, etc. in absolute compliance with the bid specification except where expressly noted below.

Instructions: List all exceptions or variations to these bid specifications. Providers shall identify each exception or variation by specification page. The omission of exception or variation information shall be deemed by the Commission as the Provider's intent to absolutely comply with the bid specification. If additional space is required, Provider may reproduce this form as necessary.

Page #	Exception/Variation
_____	_____
_____	_____
_____	_____
_____	_____
_____	_____
_____	_____
_____	_____
_____	_____
_____	_____
_____	_____

Authorized Signature of Certification: _____

Print Name: _____

Firm Represented: _____

Address: _____

_____

Letter of Compliance to E-Verify for Greenville Utilities Commission

1. I have submitted a bid for contract or desire to enter into a contract with the Greenville Utilities Commission
2. As part of my duties and responsibilities pursuant to said bid and/or contract, I affirm that I am aware of and in compliance with the requirements of E-Verify, Article 2 of Chapter 64 of the North Carolina General Statutes, to include (mark which applies):

   ☐ After hiring an employee to work in the United States I verify the work authorization of said employee through E-Verify and retain the record of the verification of work authorization while the employee is employed and for one year thereafter; or

   ☐ I employ less than twenty-five (25) employees in the State of North Carolina.

3. As part of my duties and responsibilities pursuant to said bid and/or contract, I affirm that to the best of my knowledge and subcontractors employed as a part of this bid and/or contract, are in compliance with the requirements of E-Verify, Article 2 of Chapter 64 of the North Carolina General Statutes, to include (mark which applies):

   ☐ After hiring an employee to work in the United States I verify the work authorization of said employee through E-Verify and retain the record of the verification of work authorization while the employee is employed and for one year thereafter; or

   ☐ I employ less than twenty-five (25) employees in the State of North Carolina.

   Specify subcontractor: _____

_____ (Company Name)

By: _____ (Typed Name)

_____ (Authorized Signatory)

_____ (Title)

_____ (Date)

SECTION III

TERMS AND CONDITIONS FOR THE PURCHASE OF

APPARATUS, SUPPLIES, MATERIALS, AND EQUIPMENT

These Terms and Conditions, made and entered into on this the _____ day of _____, by and between GREENVILLE UTILITIES COMMISSION OF THE CITY OF GREENVILLE, PITT COUNTY, NORTH CAROLINA, with one of its principal offices and places of business at 401 S. Greene Street, Post Office Box 1847, Greenville, Pitt County, North Carolina 27835-1847, hereinafter referred to as "GUC" and _____, a _____ organized and existing under and by virtue of the laws of the State of _____, with one of its principal offices and places of business at _____, hereinafter referred to as "PROVIDER";

1.0 TAXES

No taxes shall be included in any bid prices. GUC is exempt from Federal Excise Tax. GUC is not exempt from North Carolina state sales and use tax or, if applicable, Pitt County sales and use tax. Such taxes shall be shown as a separate item on the invoice.

2.0 INVOICES

It is understood and agreed that orders will be shipped at the established contract prices and quantities in effect on dates orders are placed. Invoicing at variance with this provision may subject the contract to cancellation. Applicable North Carolina sales tax shall be invoiced as a separate line item. All invoices must bear the GUC purchase order number. Mail all invoices to Greenville Utilities Commission, Finance Department, P.O. Box 1847, Greenville, NC 27835-1847.

3.0 PAYMENT TERMS

Payments for equipment, materials, or supplies will be made after the receipt and acceptance of the equipment, materials, supplies or services and after submission of a proper invoice. GUC's normal payment policy is thirty (30) days. GUC will not be responsible for any goods delivered without a purchase order having been issued. Payment will be made in U.S. currency only.

4.0 QUANTITIES

Quantities specified are only estimates of GUC's requirements. GUC reserves the right to purchase more or less than the stated quantities at prices indicated in the submitted Proposal Form based on our actual needs.

5.0 AFFIRMATIVE ACTION

The Provider will take affirmative action in complying with all Federal and State requirements concerning fair employment and employment of the handicapped, and concerning the treatment of all employees, without discrimination by reason of race, color, religion, sex, national origin, or physical handicap.

6.0 CONDITION AND PACKAGING

Unless otherwise indicated in the bid, it is understood and agreed that any item offered or shipped shall be new and in first class condition, that all containers shall be new and suitable for storage or shipment, and that prices include standard commercial packaging.

7.0 SAMPLES

Samples of items, if required, must be furnished free of expense to GUC, and if not destroyed, will, upon request, be returned at the Provider's expense. Request for the return of samples must be made at the bid opening; otherwise, the samples will become GUC's property. Each individual sample must be labeled with Provider's name.

8.0 SPECIFICATIONS

Any deviation from specifications must be clearly pointed out, otherwise, it will be considered that items offered are in strict compliance with specifications, and the Provider will be held responsible. Deviations must be explained in detail. **The Provider shall not construe this paragraph as inviting deviation or implying that any deviation will be acceptable.**

9.0 INFORMATION AND DESCRIPTIVE LITERATURE

Providers are to furnish all information requested. Further, as may be specified elsewhere, each Provider must submit with its proposal: cuts, sketches, descriptive literature, and/or complete specifications covering the products offered. Reference to literature submitted with a previous bid does not satisfy this provision. Bids which do not comply with these requirements will be subject to rejection.

10.0 AWARD OF CONTRACT

As directed by statute, qualified bids will be evaluated and acceptance made of the lowest responsible, responsive bid most advantageous to GUC as determined upon consideration of such factors as prices offered, the quality of the article(s) offered, the general reputation and performance capabilities of the Provider, substantial conformity with the specifications and other conditions set forth in the bid, the suitability of the article(s) for the intended use, the related services needed, the date(s) of delivery and performance, and such other factors deemed by GUC to be pertinent or peculiar to the purchase in question.

Acceptance of the order includes acceptance of all terms, conditions, prices, delivery instructions, and specifications as shown on this set of Terms and Conditions and in this order or attached to and made a part of this order.

The conditions of this order cannot be modified except by written amendment in the form of "Amended Purchase Order," which has been approved by GUC's Procurement Manager.

In the event of a Provider's failure to deliver or perform as specified, GUC reserves the right to cancel the order or any part thereof, without prejudice to GUC's other rights. The Provider agrees that GUC may return part of or all of any shipment at Provider's expense. GUC may charge the Provider with all reasonable expenses resulting from such failure to deliver or perform.

11.0 MEDIATION/BINDING ARBITRATION

In the event of any dispute between the Parties, the Parties agree to submit any dispute to non-binding mediation before a mutually agreeable Mediator prior to initiating litigation. If the Parties are unable to agree upon a Mediator within thirty (30) days after demand therefore, either Party may petition a Court of competent jurisdiction for the designation of a qualified Mediator for these purposes. Each Party shall bear its own costs and expenses of participating in the mediation (including, without limitation, reasonable attorneys' fees), and each Party shall bear one-half (1/2) of the costs and expenses of the Mediator. Unless otherwise agreed, the Parties will hold the mediation in Greenville, North Carolina. The matters discussed or revealed in the mediation session shall not be disclosed in any subsequent litigation.

In the event the matter is not resolved in mediation, either Party may request arbitration. The parties shall jointly select an Arbitrator, and shall be bound by the decision of the Arbitrator with respect to any dispute between the parties with respect to this Agreement. If the parties are unable to mutually agree upon an Arbitrator, the Parties shall each select an Arbitrator, and the two Arbitrators so selected shall select a third Arbitrator, and the decision of the majority of the Arbitrators shall be conclusive and binding upon the Parties. The Parties at all times agree to equally split the costs of any Arbitrator(s) selected in an effort to resolve the dispute between the Parties. Any party desiring to resolve a dispute under the terms of this Agreement shall notify the other Party in writing, and the Parties shall seek to agree upon a mutually agreed-upon Arbitrator within a period of ten (10) days from the date of such written demand. If the Parties are unable to agree within such ten (10) day period, the Parties shall each select an Arbitrator, and the two (2) Arbitrators so selected shall select a third Arbitrator within fifteen (15) days from the date of the written demand for arbitration, and a decision shall be rendered by the Arbitrator(s) so selected within five (5) days after such Arbitrator(s) is selected.

12.0 GOVERNMENT RESTRICTIONS

In the event any Governmental restrictions may be imposed which would necessitate alteration of the material, quality, workmanship, or performance of the items offered on this bid prior to their delivery, it shall be the responsibility of the successful Provider to notify the GUC Procurement Manager, at once, indicating in its letter the specific regulation which required such alterations. GUC reserves the right to accept any such alterations, including any price adjustments occasioned thereby, or, in the sole discretion of GUC, to cancel the contract.

13.0 INSURANCE

13.1 Coverage – During the term of the contract, the Provider at its sole cost and expense shall provide commercial insurance of such type and with the following coverage and limits:

13.1.1 Workers' Compensation – The Provider shall provide and maintain Workers' Compensation Insurance, as required by the laws of North Carolina, as well as employer's liability coverage with minimum limits of $1,000,000 each accident, covering all Providers' employees who are engaged in any work under the contract. If any work is sublet, the Provider shall require the subcontractor to provide the same coverage for any of its employees engaged in any work under the contract.

13.1.2 General Liability – Commercial Liability Coverage written on an "occurrence" basis in the minimum amount of $1,000,000 per occurrence.

13.1.3 Automobile – Automobile Liability Insurance, to include coverage for all owned, hired, and non-owned vehicles used in connection with the contract with a minimum combined single limit of $1,000,000 per accident.

13.2 Requirements - Providing and maintaining adequate insurance coverage is a material obligation of the Provider. All such insurance shall meet all laws of the State of North Carolina. Such insurance coverage shall be obtained from companies that are authorized to provide such coverage and that are authorized to do business in North Carolina by the Commissioner of Insurance. The Provider shall at all times comply with the terms of such insurance policies and all requirements of the insurer under any of such insurance policies, except as they may conflict with existing North Carolina laws or this contract. The limits of coverage under each insurance policy maintained by the Provider shall not be interpreted as limiting the Provider's liability and obligations under the contract. It is agreed that the coverage as stated shall not be canceled or changed until thirty (30) days after written notice of such termination or alteration has been sent by registered mail to GUC's Procurement Manager.

14.0 PATENTS AND COPYRIGHTS

The Provider shall hold and save GUC, its officers, agents, and employees, harmless from liability of any kind, including costs and expenses, including reasonable attorney fees, on account of any copyrighted articles or any patented or unpatented invention, device or appliance manufactured or used in the performance of this contract.

15.0 PATENT AND COPYRIGHT INDEMNITY

The Provider will defend or settle, at its own expense, any action brought against GUC to the extent that it is based on a claim that the product(s) provided pursuant to this agreement infringe any U.S. copyright or patent; and will pay those costs, damages, and attorney fees finally awarded against GUC in any such action attributable to any such claim, but such defense, settlements, and payments are conditioned on the following: (1) that Provider shall be notified promptly in writing by GUC of any such claim; (2) that Provider shall have sole control of the defense of any action on such claim and of all negotiations for its settlement or compromise; (3) that GUC shall cooperate with Provider in a reasonable way to facilitate the settlement of defense of such claim; (4) that such claim does not arise from GUC modifications not authorized by the Provider or from the use of combination of products provided by the Provider with products provided by GUC or by others; and (5) should such product(s) become, or in the Provider's opinion likely to become, the subject of such claim of infringement, then GUC shall permit Provider, at Provider's option and expense, either to procure for GUC the right to continue using the product(s), or replace or modify the same so that it becomes non-infringing and performs in a substantially similar manner to the original product.

16.0 EXCEPTIONS

All proposals are subject to the terms and conditions outlined herein. All responses will be controlled by such terms and conditions and the submission of other terms and conditions, price catalogs, and other documents as part of a Provider's response will be waived and have no effect on this Request for Proposal or any other contract that may be awarded resulting from this solicitation. The submission of any other terms and conditions by a Provider may be grounds for rejection of the Provider's proposal. The Provider specifically agrees to the terms and conditions set forth in this set of Terms and Conditions by affixing its name on the signatory page contained herein.

17.0 CONFIDENTIAL INFORMATION

Except as provided by statute and rule of law, GUC will keep trade secrets in which the Provider does not wish disclosed confidential. Each page shall be identified in boldface at the top and bottom as "CONFIDENTIAL" by the Provider. Cost information shall not be deemed confidential. The determination of whether a matter is confidential will be determined by North Carolina law.

18.0 ASSIGNMENT

No assignment of the Provider's obligations or the Provider's right to receive payment hereunder shall be permitted without the express written consent of GUC, provided however, upon written request approved by the GUC Procurement Manager, solely as a convenience to the Provider, GUC may:

- Forward the Provider's payment check directly to any person or entity designated by the Provider, and

- Include any person or entity designated by Provider as a joint payee on the Provider's payment check.

- In no event shall such approval and action obligate GUC to anyone other than the Provider, and the Provider shall remain responsible for fulfillment of all contract obligations.

19.0 ACCESS TO PERSON AND RECORDS

GUC shall have reasonable access to persons and records of Provider as a result of all contracts entered into by GUC.

20.0 INSPECTION AT BIDDER'S SITE

GUC reserves the right to inspect, at a reasonable time, the item, plant, or other facilities of a prospective Provider prior to contract award and during the contract term as necessary for GUC's determination that such item, plant, or other facilities conform to the specifications/requirements and are adequate and suitable for the proper and effective performance of the contract. Provider may limit GUC's access to restricted areas.

21.0 AVAILABILITY OF FUNDS

Any and all payments of compensation of this specific transaction and any continuation or any renewal or extension are dependent upon and subject to the allocation of GUC funds for the purpose set forth in this Agreement.

22.0 GOVERNING LAWS

All contracts, transactions, agreements, etc., are made under and shall be governed by and construed in accordance with the laws of the State of North Carolina.

23.0 ADMINISTRATIVE CODE

Bids, proposals, and awards are subject to applicable provisions of the North Carolina Administrative Code and General Statues and Laws of the State of North Carolina.

24.0 EXECUTION

In the discretion of GUC, failure of a duly authorized official of Provider to sign the Signatory Page may render the bid invalid.

25.0 CLARIFICATIONS/INTERPRETATIONS

Any and all questions regarding these Terms and Conditions must be addressed to the GUC Procurement Manager. Do not contact the user directly. **These Terms and Conditions are a complete statement of the parties' agreement and may only be modified in writing signed by Provider and the GUC Procurement Manager.**

26.0 SITUS

The place of all contracts, transactions, agreements, their situs and forum, shall be North Carolina, where all matters, whether in contract or tort, relating to the validity, construction, interpretation, and enforcement shall be determined.

27.0 TERMINATION OF AGREEMENT

GUC or Provider may terminate this Agreement for just cause at any time. Provider will be paid for all time and expenses incurred as of the termination date. Termination for just cause by either party shall be by certified letter and shall be effective thirty (30) days after signed and acknowledged receipt of said letter. Just cause shall be based on reasonable grounds, and there must be a fair and honest cause or reason for such action. The causes for termination, include, but are not limited to: (1) Provider's persistent failure to perform in accordance with the Terms and Conditions, (2) Provider's disregard of laws and regulations related to this transaction, and/or (3) Provider's substantial violation of the provisions of the Terms and Conditions.

28.0 DELIVERY

Shipments will be made only upon releases from a purchase order issued by GUC in accordance with GUC's current needs.

Time is of the essence with respect to all deliveries under this Agreement. Delivery of all equipment, materials, or supplies shall be made Free on Board (FOB) GUC Warehouse, 701 Utility Way, Greenville, North Carolina 27834, unless otherwise specified. **Transport by rail or truck are the only acceptable delivery methods from the factory to GUC**. The agreed price for such equipment, materials, or supplies shall include all costs of delivery and ownership, and risks of loss shall not be transferred from Provider to GUC until express written acceptance of delivery and inspection by GUC. Delivery hours are between 8:00 AM and 4:30 PM Tuesday-Thursday only. **GUC's purchase order number is to be shown on the packing slip or any related documents.** GUC reserves the right to refuse or return any delivery with no purchase order number or which is damaged. GUC will not be charged a restocking fee for any delivery which is refused or returned.

29.0 INDEMNITY PROVISION

Provider agrees to indemnify and save GREENVILLE UTILITIES COMMISSION of the City of Greenville, Pitt County, North Carolina, and the City of Greenville, North Carolina, its co-owners, joint venturers, agents, employees, and insurance carriers harmless from any and all losses, claims, actions, costs, expenses including reasonable attorney fees, judgments, subrogations, or other damages resulting from injury to any person (including injury resulting in death), or damage (including loss or destruction) to property of whatsoever nature of any person arising out of or incident to the performance of the terms of this Contract by Provider, including, but not limited to, Provider's employees, agents, subcontractors, and others designated by Provider to perform work or services in, about, or attendant to, the work and services under the terms of this Contract. Provider shall not be held responsible for any losses, expenses, claims, subrogations, actions, costs, judgments, or other damages, directly, solely, and proximately caused by the negligence of Greenville Utilities Commission of the City of Greenville, Pitt County, North Carolina. Insurance covering this indemnity agreement by the Provider in favor of Greenville Utilities Commission of the City of Greenville, Pitt County, North Carolina, and the City of Greenville, North Carolina, shall be provided by Provider.

30.0 FORCE MAJEURE

Neither party shall be considered in default in the performance of its obligations hereunder to the extent that the performance of any such obligation is prevented or delayed by any cause, existing or future, which is beyond the reasonable control of such party. In any such event of force majeure, the parties shall advise each other of such event, and the parties shall negotiate an equitable adjustment to their respective obligations under this Agreement.

31.0 WARRANTY(IES)

The Provider hereby includes all warranties, whether expressed or implied, including, but not limited to, the Implied Warranty of Merchantability and the Implied Warranty of Fitness for a Particular Purpose.

32.0 INTEGRATED CONTRACT

These Terms and Conditions, Instructions to Bidders, Specifications, and the selected Provider's bid represents the entire contract between the Parties. No verbal or other written agreement(s) shall be held to vary the provisions of this Agreement.

33.0 CONTRACT PROVISIONS

Each of the provisions of these Terms and Conditions shall apply to the full extent permitted by law, and the invalidity in whole or in part of any provision shall not affect the remainder of such provision or any other provisions.

34.0 E-VERIFY

E-Verify - I understand that E-Verify is the federal E-Verify program operated by the United States Department of Homeland Security and other federal agencies, or any successor or equivalent program used to verify the work authorization of newly hired employees pursuant to federal law in accordance with NCGS §64-25 et seq. I am aware of and in compliance with the requirements of E-Verify and Article 2 of Chapter 64 of the North Carolina General Statutes. To the best of my knowledge, any subcontractors employed by me as a part of this contract are in compliance with the requirements of E-Verify and Article 2 of Chapter 64 of the North Carolina General Statutes.

35.0 IRAN DIVESTMENT ACT CERTIFICATION

By acceptance of this purchase order, Vendor/Contractor certifies that, as of the date of the purchase order or contract, it is not on the Final Divestment List as created by the State Treasurer pursuant to N.C.G.S. § 143-6A-4. In compliance with the requirements of the Iran Divestment Act and N.C.G.S. § 143C-6A-5(b), Vendor/Contractor shall not utilize in the performance of the contract any subcontractor that is identified on the Final Divestment List.

36.0 UNIFORM GUIDANCE

Contracts funded with federal grant or loan funds must be procured in a manner that conforms with all applicable federal laws, policies, and standards, including those under the Uniform Guidance (2 C.F.R. Part 200).

37.0 NOTICES

Notices to the Parties should be sent to the names and addresses specified below:

Cleve Haddock, Lifetime CLGPO
Procurement Manager
Greenville Utilities Commission
P.O. Box 1847
Greenville, NC 27835-1847

Vendor Specified on Page 1 of Section III when awarded.

GREENVILLE UTILITIES COMMISSION

By: _____
Anthony C. Cannon

Title: General Manager/CEO_____
(Authorized Signatory)

Date: _____

Attest: _____

Name (Print): Amy Wade_____

Title: Executive Secretary_____

Date: _____

(OFFICIAL SEAL)

COMPANY NAME:

By: _____

Name (Print): _____

Title: _____
(Authorized Signatory)

Date: _____

Attest: _____

Name (Print): _____

Title: Corporate Secretary_____

Date: _____

(CORP. SEAL)

APPROVED AS TO FORM AND LEGAL CONTENT:

By: _____
Phillip R. Dixon

Title: General Counsel_____

Date: _____