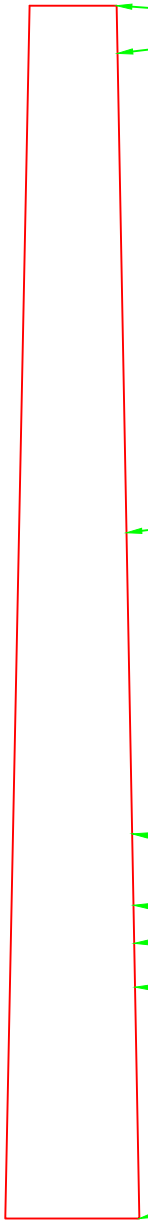

LOCATION DIMENSION			
FROM LARGE END	FROM SMALL END	TOLERANCES BLANK–M–1	DETAIL
	0'–0.00"		7
	1'–6.00"		4
33'–6.00"			4
14.0'			5
12.0'			4
11.0'			3
9.0'			2
9.0'			GL
0'–00"			1

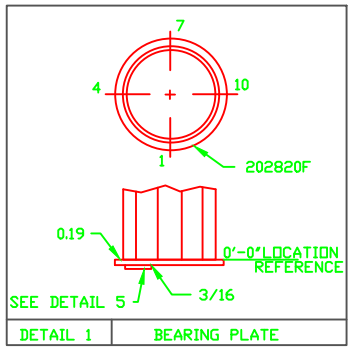

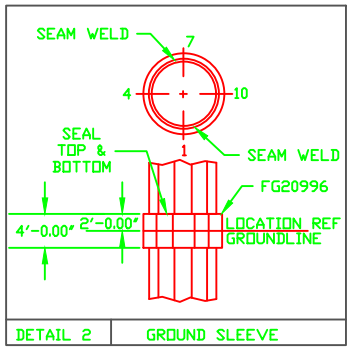

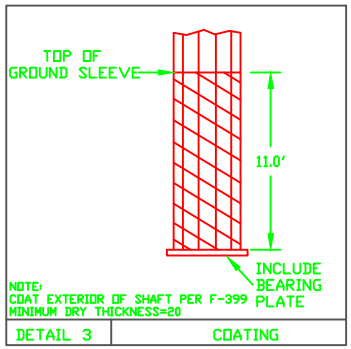

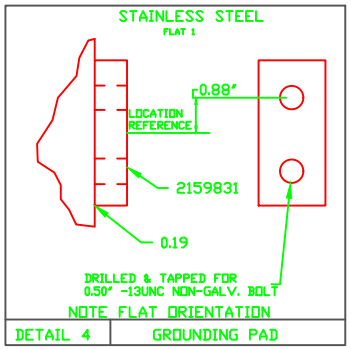

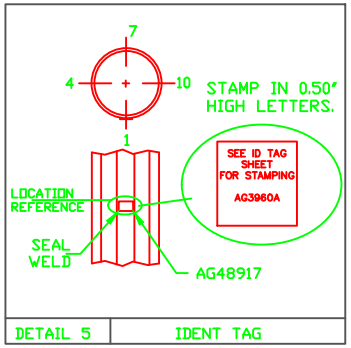

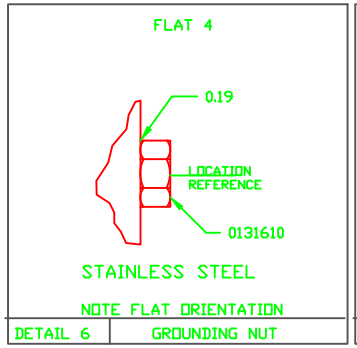

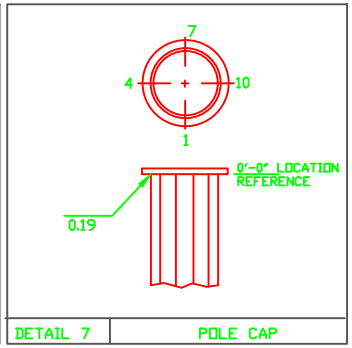

NOTE: DIMENSIONS IN THE DRAWING ARE NOT TRUE TO PROPORTION.

NOTES:

1. FLATS 1 AND 12 ARE ADJACENT TO SEAM WELD
2. ALL CROSS SECTION VIEWS ARE FROM SMALL END OF TUBE.
3. POLE TUBE DATA REF MATERIAL=S–99

TUBE LENGTH	END OD (IN) LARGE	END OD (IN) SMALL	THICKNESS (IN)
70'			

TUBE DIAMETERS MEASURED ACROSS FLATS

GREENVILLE UTILITIES COMMISSION
GREENVILLE, NORTH CAROLINA

Greenville Utilities

CIRCUIT 15, STRUCTURE 1–4, 7–14
GROUNDING AND COATINGS DETAIL

DWN. JLS		DATE: 12/09/19	
CKD. KW		APPD. KW	
SCALE: N.T.S.			
DATE	REVISION	DATE	REVISION

DWG. NO.

1G

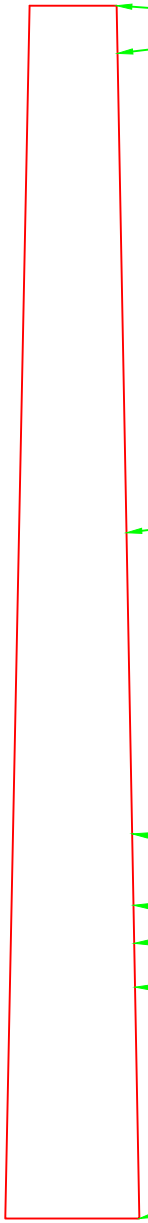

LOCATION DIMENSION			
FROM LARGE END	FROM SMALL END	TOLERANCES BLANK-M-1	DETAIL
	0'-0.00"		7
	2'-0.00"		4
33'-6.00"			4
14.5'			5
12.5'			4
11.5'			3
9.5'			2
9.5'			GL
0'-00"			1

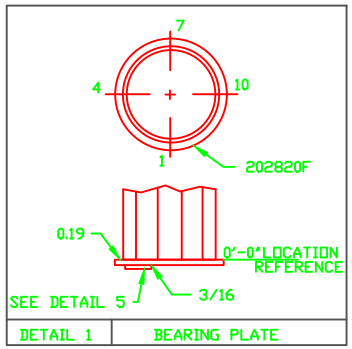

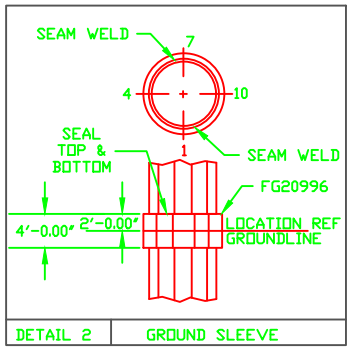

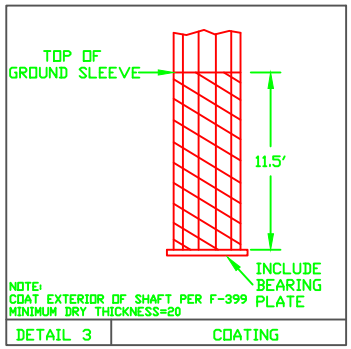

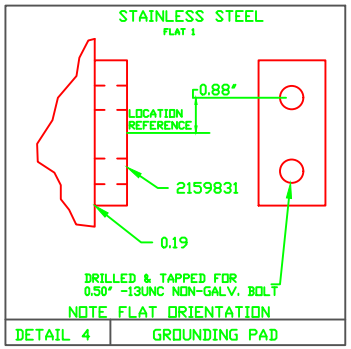

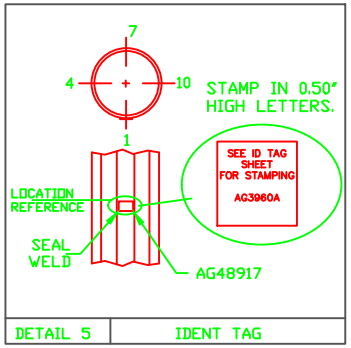

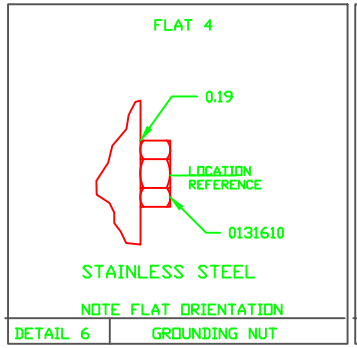

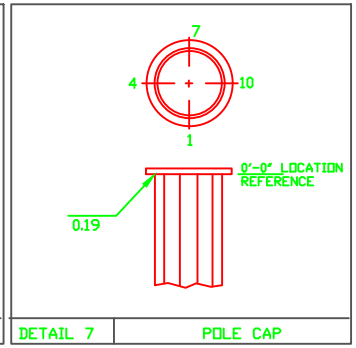

NOTE: DIMENSIONS IN THE DRAWING ARE NOT TRUE TO PROPORTION.

NOTES:

1. FLATS 1 AND 12 ARE ADJACENT TO SEAM WELD
2. ALL CROSS SECTION VIEWS ARE FROM SMALL END OF TUBE.
3. POLE TUBE DATA REF MATERIAL=S-99

TUBE LENGTH	END OD (IN) LARGE	END OD (IN) SMALL	THICKNESS (IN)
75'			

TUBE DIAMETERS MEASURED ACROSS FLATS

GREENVILLE UTILITIES COMMISSION
GREENVILLE, NORTH CAROLINA

Greenville Utilities

CIRCUIT 15 STRUCTURE 5 & 16
GROUNDING AND COATINGS DETAIL

DWN. JLS		DATE: 12/23/2019	
CKD. KW		APPD. KW	
SCALE: N.T.S.			
DATE	REVISION	DATE	REVISION

DWG. NO.

5G

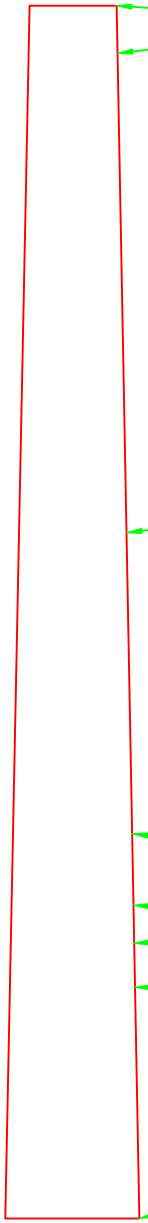

LOCATION DIMENSION			
FROM LARGE END	FROM SMALL END	TOLERANCES BLANK-M-1	DETAIL
	0'-0.00"		7
	2'-0.00"		4
27'-0.00"			4
14.5'			5
12.5'			4
11.5'			3
9.5'			2
9.5'			GL
0'-00"			1

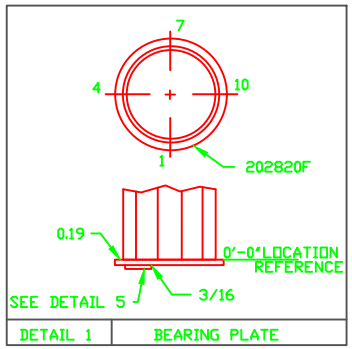

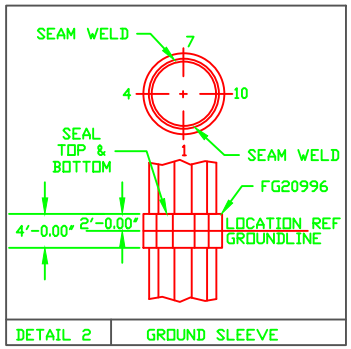

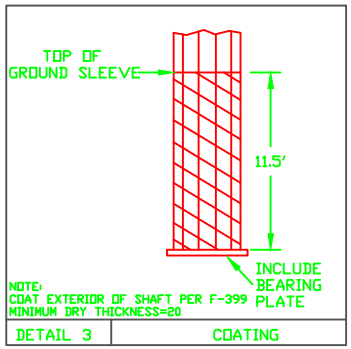

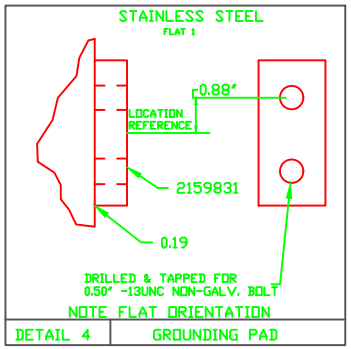

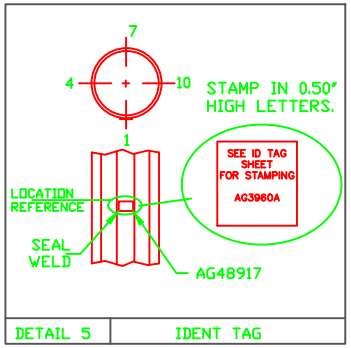

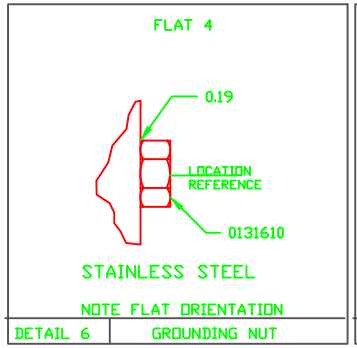

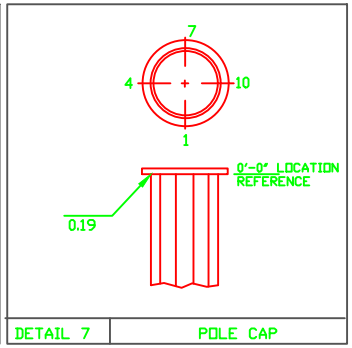

NOTE: DIMENSIONS IN THE DRAWING ARE NOT TRUE TO PROPORTION.

NOTES:

1. FLATS 1 AND 12 ARE ADJACENT TO SEAM WELD
2. ALL CROSS SECTION VIEWS ARE FROM SMALL END OF TUBE.
3. POLE TUBE DATA REF MATERIAL=S-99

TUBE LENGTH	END OD (IN) LARGE	END OD (IN) SMALL	THICKNESS (IN)
75'			

TUBE DIAMETERS MEASURED ACROSS FLATS

GREENVILLE UTILITIES COMMISSION
GREENVILLE, NORTH CAROLINA

Greenville Utilities

CIRCUIT 15 STRUCTURE 6
GROUNDING AND COATINGS DETAIL

DWN. JLS		DATE: 12/09/2019	
CKD. KW		APPD. KW	
SCALE: N.T.S.			
DATE	REVISION	DATE	REVISION

DWG. NO.

6G

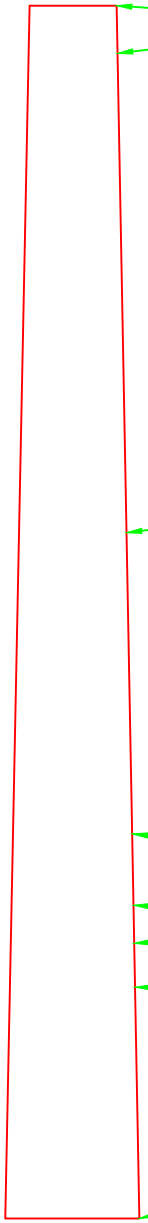

LOCATION DIMENSION			
FROM LARGE END	FROM SMALL END	TOLERANCES BLANK-M-1	DETAIL
	0'-0.00"		7
	2'-0.00"		4
36'-6.00"			4
15.5'			5
13.5'			4
12.5'			3
10.5'			2
10.5'			GL
0'-00"			1

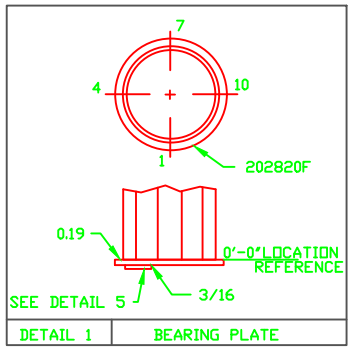

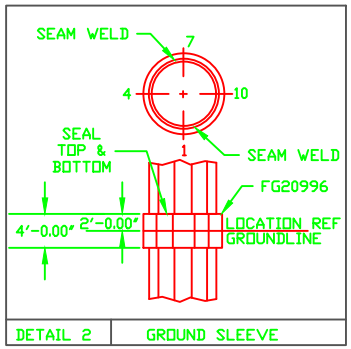

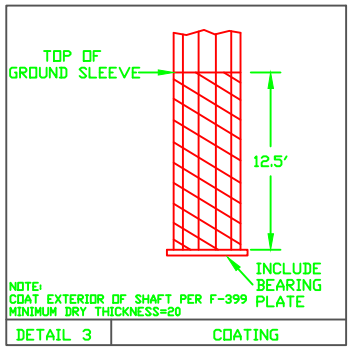

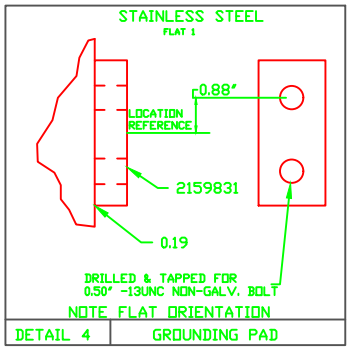

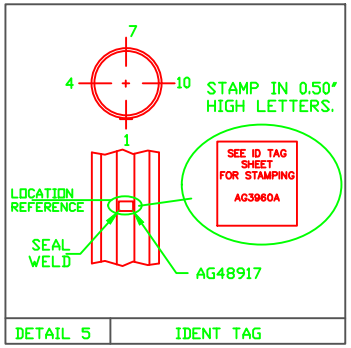

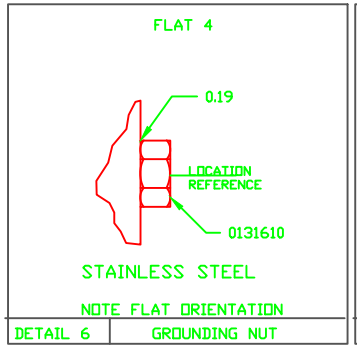

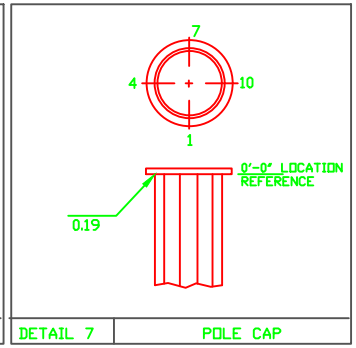

NOTE: DIMENSIONS IN THE DRAWING ARE NOT TRUE TO PROPORTION.

NOTES:

1. FLATS 1 AND 12 ARE ADJACENT TO SEAM WELD
2. ALL CROSS SECTION VIEWS ARE FROM SMALL END OF TUBE.
3. POLE TUBE DATA REF MATERIAL=S-99

TUBE LENGTH	END OD (IN) LARGE	END OD (IN) SMALL	THICKNESS (IN)
85'			

TUBE DIAMETERS MEASURED ACROSS FLATS

GREENVILLE UTILITIES COMMISSION
GREENVILLE, NORTH CAROLINA

Greenville Utilities

CIRCUIT 15 STRUCTURE 15
GROUNDING AND COATINGS DETAIL

DWN. JLS		DATE: 12/09/2019	
CKD. KW		APPD. KW	
SCALE: N.T.S.			
DATE	REVISION	DATE	REVISION

DWG. NO.

15G

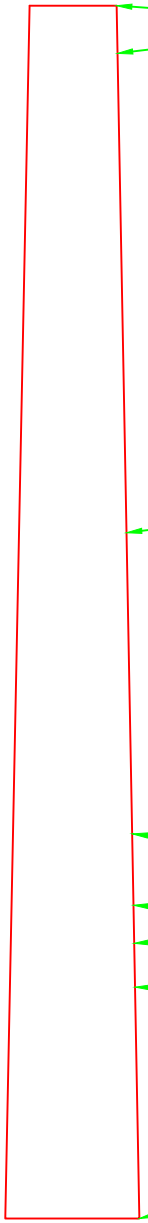

LOCATION DIMENSION			
FROM LARGE END	FROM SMALL END	TOLERANCES BLANK-M-1	DETAIL
	0'-0.00"		7
	1'-6.00"		4
30'-0.00"			4
13.0'			5
11.0'			4
10.0'			3
8.0'			2
8.0'			GL
0'-00"			1

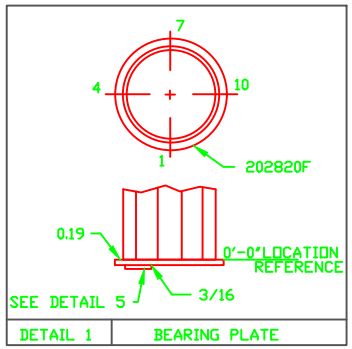

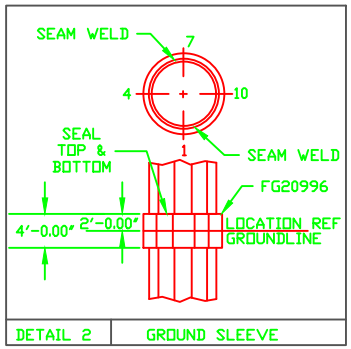

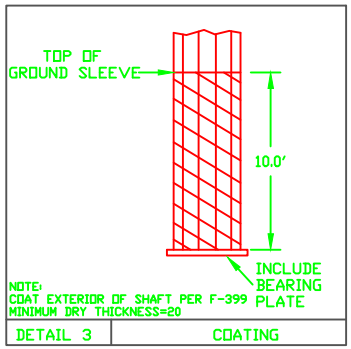

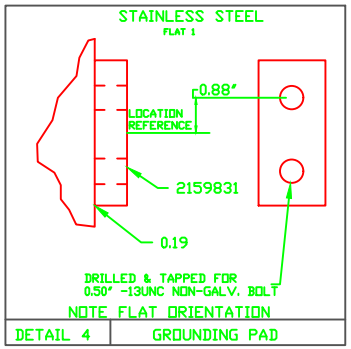

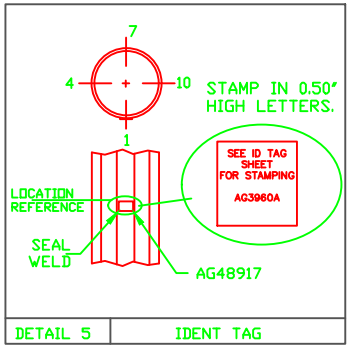

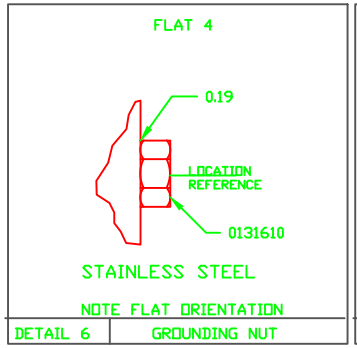

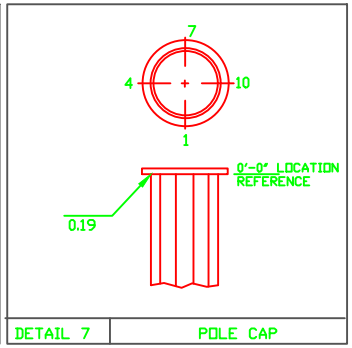

NOTE: DIMENSIONS IN THE DRAWING ARE NOT TRUE TO PROPORTION.

NOTES:

1. FLATS 1 AND 12 ARE ADJACENT TO SEAM WELD
2. ALL CROSS SECTION VIEWS ARE FROM SMALL END OF TUBE.
3. POLE TUBE DATA REF MATERIAL=S-99

TUBE LENGTH	END OD (IN) LARGE	END OD (IN) SMALL	THICKNESS (IN)
60'			

TUBE DIAMETERS MEASURED ACROSS FLATS

GREENVILLE UTILITIES COMMISSION
GREENVILLE, NORTH CAROLINA

Greenville Utilities

CIRCUIT 15 STRUCTURE 16a & 18a
GROUNDING AND COATINGS DETAIL

DWN. JLS		DATE: 12/09/2019	
CKD. KW		APPD. KW	
SCALE: N.T.S.			
DATE	REVISION	DATE	REVISION

DWG. NO.
16(a)G

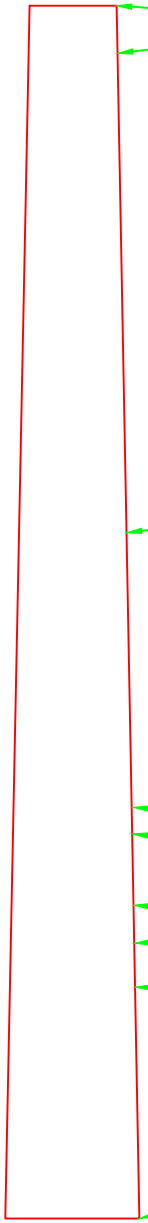

LOCATION DIMENSION			
FROM LARGE END	FROM SMALL END	TOLERANCES BLANK-M-1	DETAIL
	0'-0.00"		7
	1'-6.00"		4
33'-6.00"			4
16.0'			4
15.0'			5
13.0'			4
12.0'			3
10.0'			2
10.0'			GL
0'-00"			1

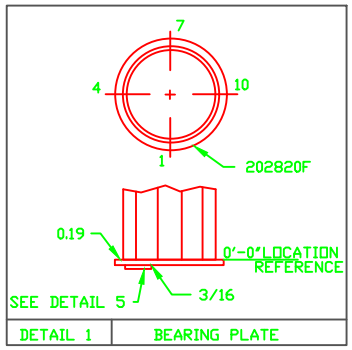

DETAIL 1 | BEARING PLATE

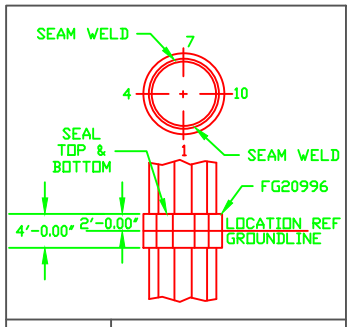

DETAIL 2 | GROUND SLEEVE

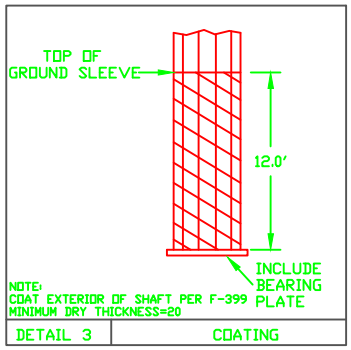

DETAIL 3 | COATING

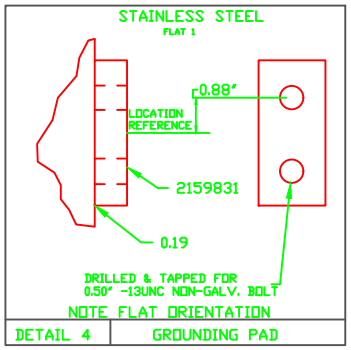

DETAIL 4 | GROUNDING PAD

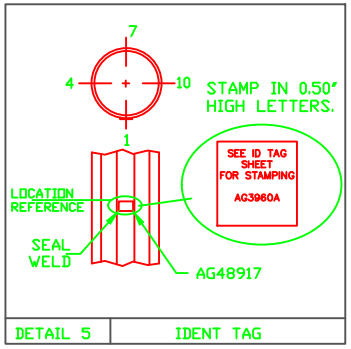

DETAIL 5 | IDENT TAG

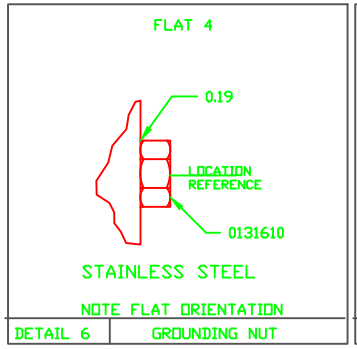

DETAIL 6 | GROUNDING NUT

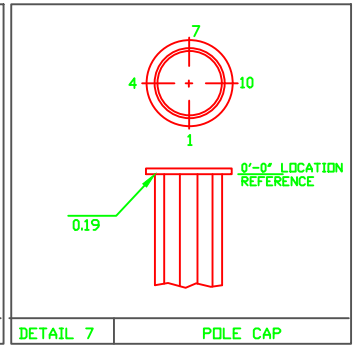

DETAIL 7 | POLE CAP

NOTE: DIMENSIONS IN THE DRAWING ARE NOT TRUE TO PROPORTION.

NOTES:

1. FLATS 1 AND 12 ARE ADJACENT TO SEAM WELD
2. ALL CROSS SECTION VIEWS ARE FROM SMALL END OF TUBE.
3. POLE TUBE DATA REF MATERIAL=S-99

TUBE LENGTH	END OD (IN) LARGE	END OD (IN) SMALL	THICKNESS (IN)
80'			

TUBE DIAMETERS MEASURED ACROSS FLATS

GREENVILLE UTILITIES COMMISSION
GREENVILLE, NORTH CAROLINA

Greenville Utilities

CIRCUIT 15, STRUCTURE 17
GROUNDING AND COATINGS DETAIL

DWN. JLS		DATE: 01/24/20	
CKD. KW		APPD. KW	
SCALE: N.T.S.			
DATE	REVISION	DATE	REVISION

DWG. NO.
17G

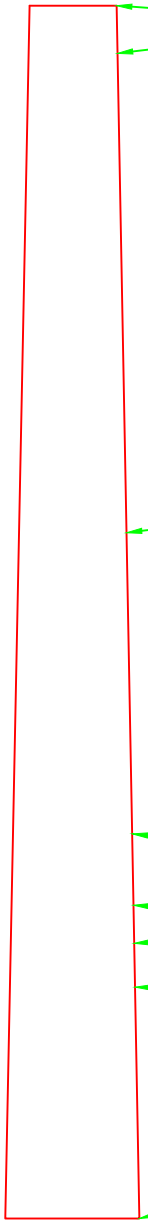

LOCATION DIMENSION			
FROM LARGE END	FROM SMALL END	TOLERANCES BLANK-M-1	DETAIL
	0'-0.00"		7
	2'-0.00"		4
	49'-0.00"		4
15.0'			5
13.0'			4
12.0'			3
10.0'			2
10.0'			GL
0'-00"			1

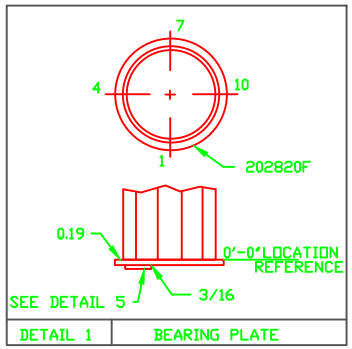

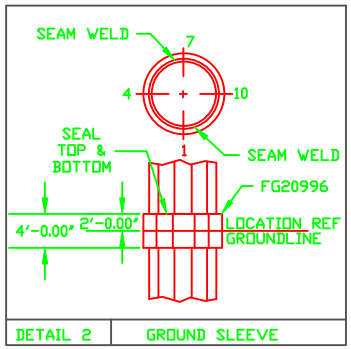

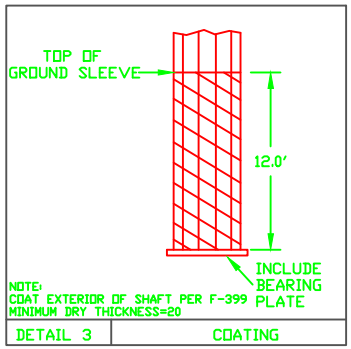

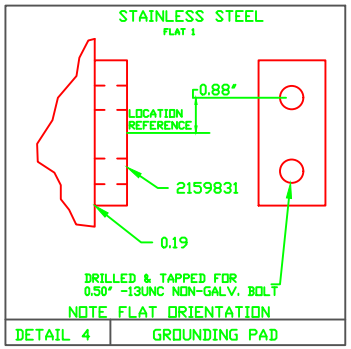

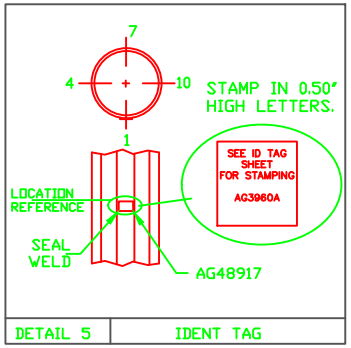

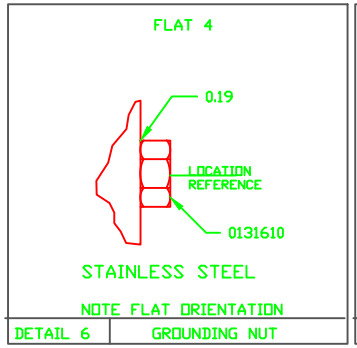

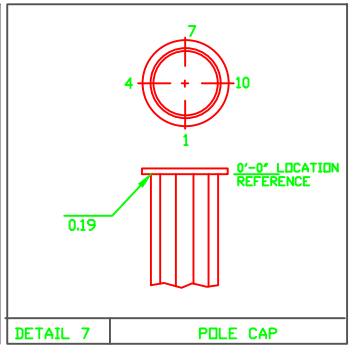

NOTE: DIMENSIONS IN THE DRAWING ARE NOT TRUE TO PROPORTION.

NOTES:

1. FLATS 1 AND 12 ARE ADJACENT TO SEAM WELD
2. ALL CROSS SECTION VIEWS ARE FROM SMALL END OF TUBE.
3. POLE TUBE DATA REF MATERIAL=S-99

TUBE LENGTH	END OD (IN) LARGE	END OD (IN) SMALL	THICKNESS (IN)
80'			

TUBE DIAMETERS MEASURED ACROSS FLATS

GREENVILLE UTILITIES COMMISSION
GREENVILLE, NORTH CAROLINA

Greenville Utilities

CIRCUIT 15 STRUCTURE 18
GROUNDING AND COATINGS DETAIL

DWN. JLS		DATE: 12/09/2019	
CKD. KW		APPD. KW	
SCALE: N.T.S.			
DATE	REVISION	DATE	REVISION

DWG. NO.

18G

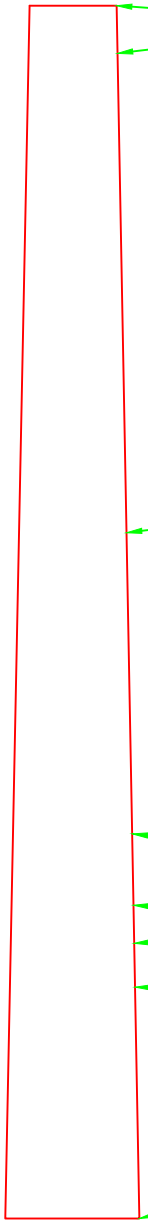

LOCATION DIMENSION			
FROM LARGE END	FROM SMALL END	TOLERANCES BLANK-M-1	DETAIL
	0'-0.00"		7
	0'-6.00"		4
23'-0.00"			4
11.5'			5
9.5'			4
8.5'			3
6.5'			2
6.5'			GL
0'-00"			1

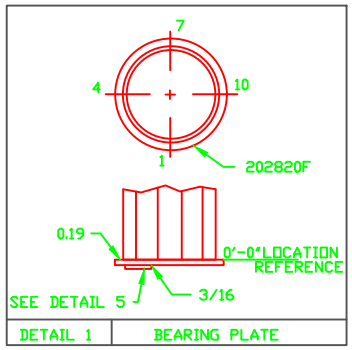

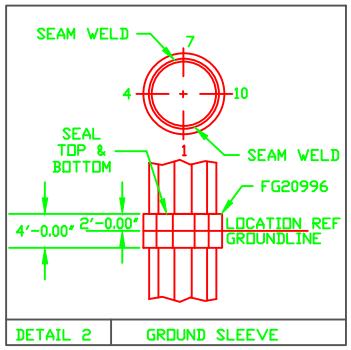

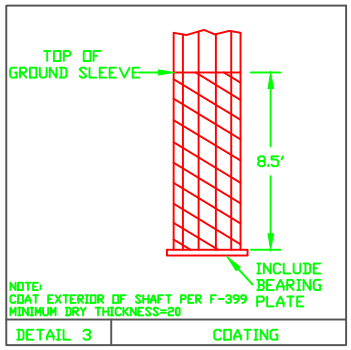

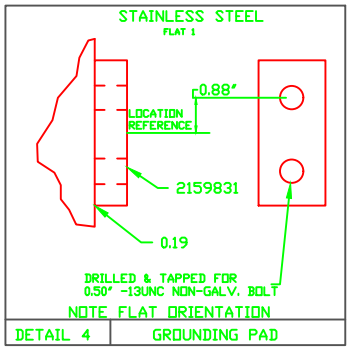

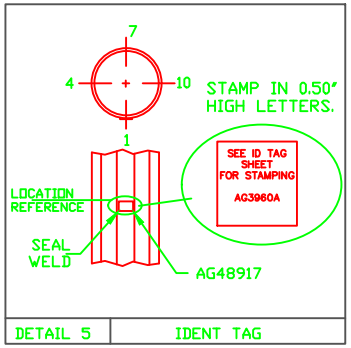

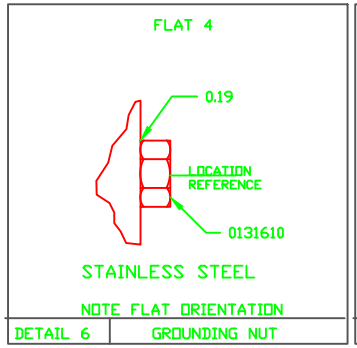

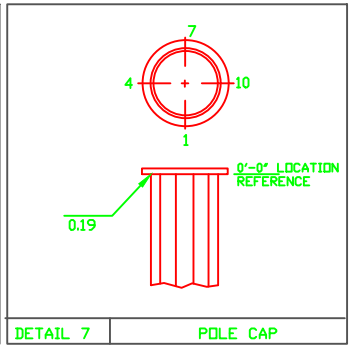

NOTE: DIMENSIONS IN THE DRAWING ARE NOT TRUE TO PROPORTION.

NOTES:

1. FLATS 1 AND 12 ARE ADJACENT TO SEAM WELD
2. ALL CROSS SECTION VIEWS ARE FROM SMALL END OF TUBE.
3. POLE TUBE DATA REF MATERIAL=S-99

TUBE LENGTH	END OD (IN) LARGE	END OD (IN) SMALL	THICKNESS (IN)
45'			

TUBE DIAMETERS MEASURED ACROSS FLATS

GREENVILLE UTILITIES COMMISSION
GREENVILLE, NORTH CAROLINA

Greenville Utilities

CIRCUIT 16, STRUCTURE 1
GROUNDING AND COATINGS DETAIL

DWN. JLS		DATE: 12/09/19		DWG. NO.
CKD. KW		APPD. KW		
SCALE: N.T.S.				1G
DATE	REVISION	DATE	REVISION	

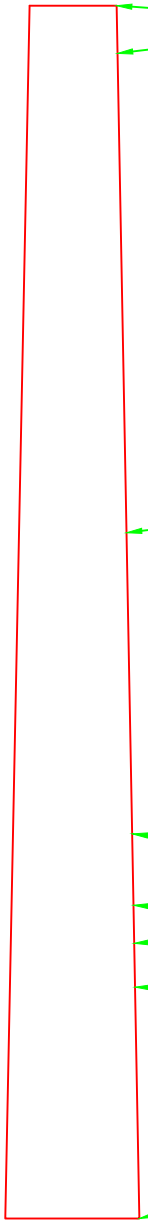

LOCATION DIMENSION			
FROM LARGE END	FROM SMALL END	TOLERANCES BLANK-M-1	DETAIL
	0'-0.00"		7
	2'-0.00"		4
33'-0.00"			4
14.0'			5
12.0'			4
11.0'			3
9.0'			2
9.0'			GL
0'-00"			1

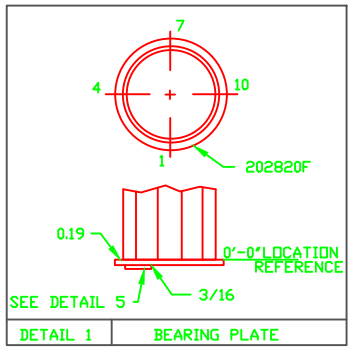

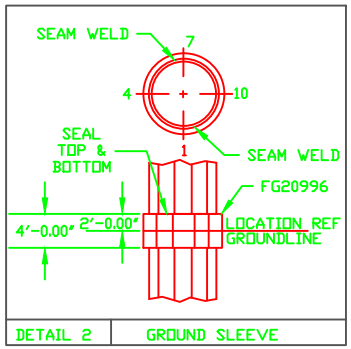

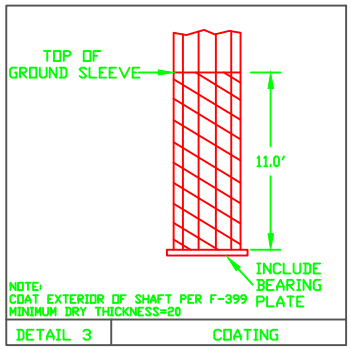

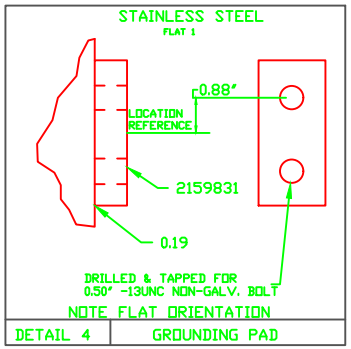

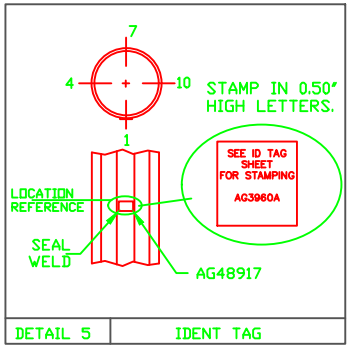

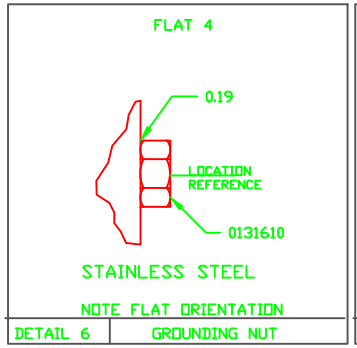

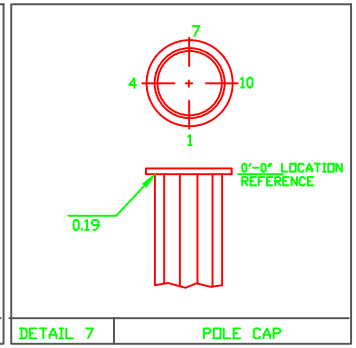

NOTE: DIMENSIONS IN THE DRAWING ARE NOT TRUE TO PROPORTION.

NOTES:

1. FLATS 1 AND 12 ARE ADJACENT TO SEAM WELD
2. ALL CROSS SECTION VIEWS ARE FROM SMALL END OF TUBE.
3. POLE TUBE DATA REF MATERIAL=S-99

TUBE LENGTH	END OD (IN) LARGE	END OD (IN) SMALL	THICKNESS (IN)
70'			

TUBE DIAMETERS MEASURED ACROSS FLATS

GREENVILLE UTILITIES COMMISSION
GREENVILLE, NORTH CAROLINA

Greenville Utilities

CIRCUIT 16, STRUCTURE 2-6
GROUNDING AND COATINGS DETAIL

DWN. JLS		DATE: 12/09/19	
CKD. KW		APPD. KW	
SCALE: N.T.S.			
DATE	REVISION	DATE	REVISION

DWG. NO.

2G

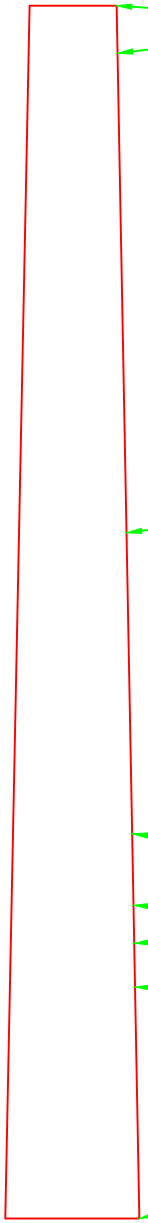

LOCATION DIMENSION			
FROM LARGE END	FROM SMALL END	TOLERANCES BLANK-M-1	DETAIL
	0'-0.00"		7
	1'-6.00"		4
33'-0.00"			4
14.5'			5
12.5'			4
11.5'			3
9.5'			2
9.5'			GL
0'-00"			1

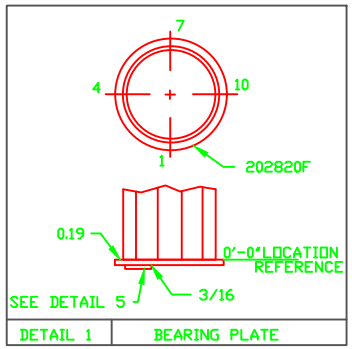

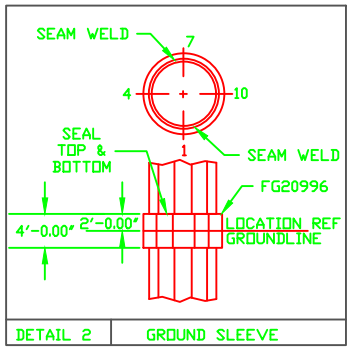

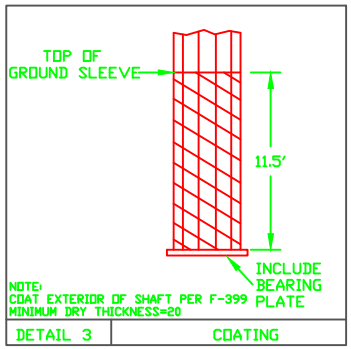

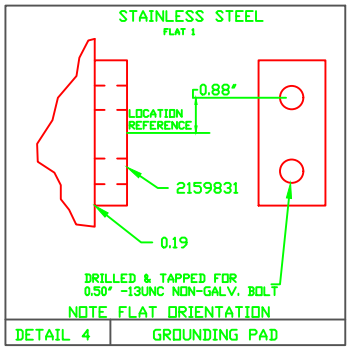

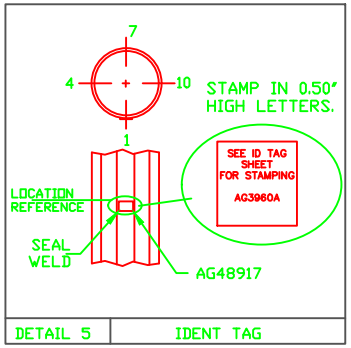

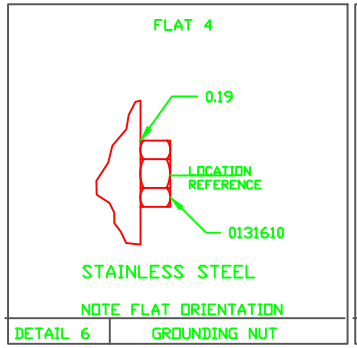

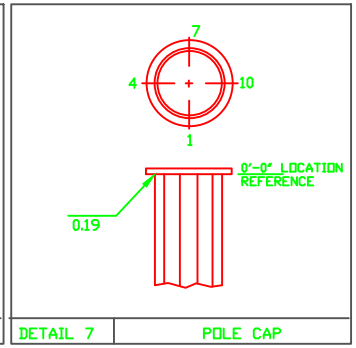

NOTE: DIMENSIONS IN THE DRAWING ARE NOT TRUE TO PROPORTION.

NOTES:

1. FLATS 1 AND 12 ARE ADJACENT TO SEAM WELD
2. ALL CROSS SECTION VIEWS ARE FROM SMALL END OF TUBE.
3. POLE TUBE DATA REF MATERIAL=S-99

TUBE LENGTH	END OD (IN) LARGE	END OD (IN) SMALL	THICKNESS (IN)
75'			

TUBE DIAMETERS MEASURED ACROSS FLATS

GREENVILLE UTILITIES COMMISSION
GREENVILLE, NORTH CAROLINA

Greenville Utilities

CIRCUIT 16, STRUCTURE 7
GROUNDING AND COATINGS DETAIL

DWN. JLS		DATE: 12/09/19	
CKD. KW		APPD. KW	
SCALE: N.T.S.			
DATE	REVISION	DATE	REVISION

DWG. NO.

7G

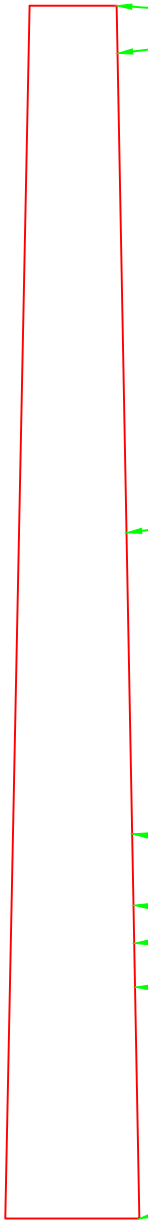

LOCATION DIMENSION			
FROM LARGE END	FROM SMALL END	TOLERANCES BLANK-M-1	DETAIL
	0'-0.00"		7
	1'-6.00"		4
	22'-0.00"		4
14.5'			5
12.5'			4
11.5'			3
9.5'			2
9.5'			GL
0'-00"			1

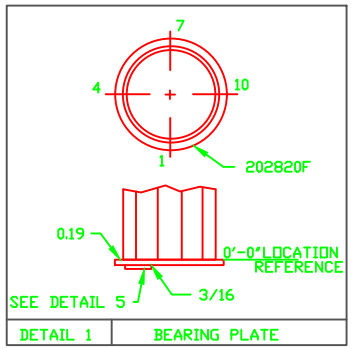

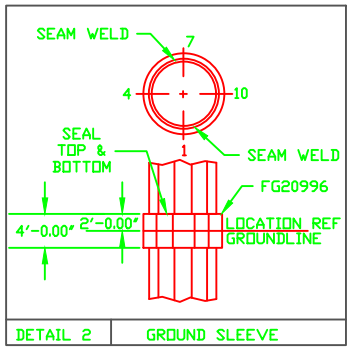

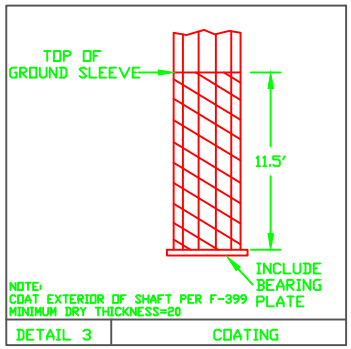

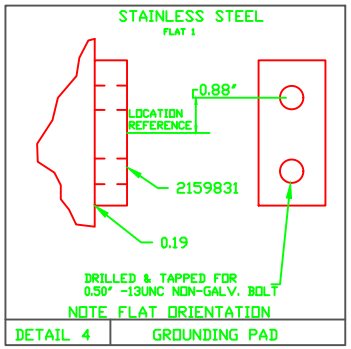

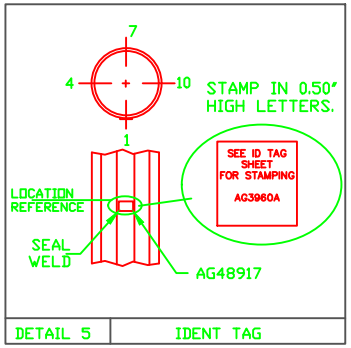

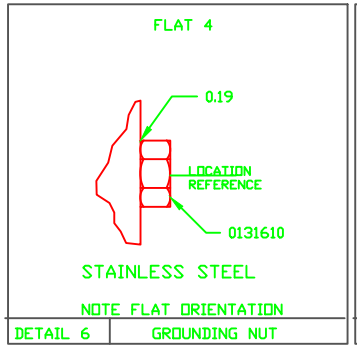

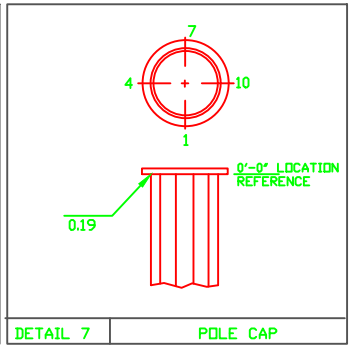

NOTE: DIMENSIONS IN THE DRAWING ARE NOT TRUE TO PROPORTION.

NOTES:

1. FLATS 1 AND 12 ARE ADJACENT TO SEAM WELD
2. ALL CROSS SECTION VIEWS ARE FROM SMALL END OF TUBE.
3. POLE TUBE DATA REF MATERIAL=S-99

TUBE LENGTH	END OD (IN) LARGE	END OD (IN) SMALL	THICKNESS (IN)
75'			

TUBE DIAMETERS MEASURED ACROSS FLATS

GREENVILLE UTILITIES COMMISSION
GREENVILLE, NORTH CAROLINA

Greenville Utilities

CIRCUIT 16, STRUCTURE 8
GROUNDING AND COATINGS DETAIL

DWN. JLS		DATE: 12/09/19	
CKD. KW		APPD. KW	
SCALE: N.T.S.			
DATE	REVISION	DATE	REVISION

DWG. NO.

8G

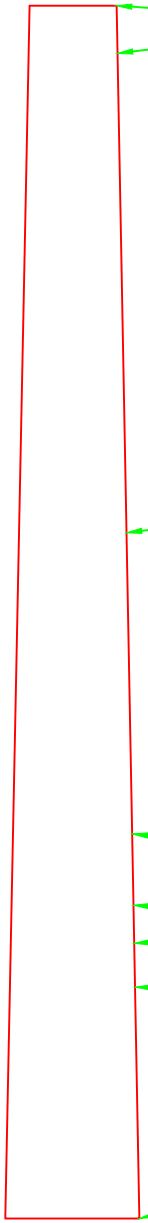

LOCATION DIMENSION			
FROM LARGE END	FROM SMALL END	TOLERANCES BLANK-M-1	DETAIL
	0'-0.00"		7
	1'-6.00"		4
38'-6.00"			4
15.5'			5
13.5'			4
12.5'			3
10.5'			2
10.5'			GL
0'-00"			1

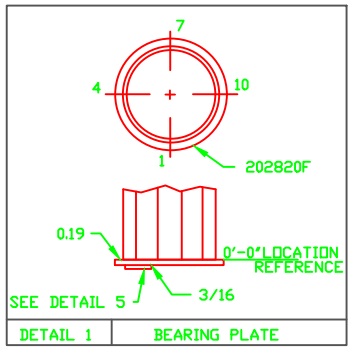

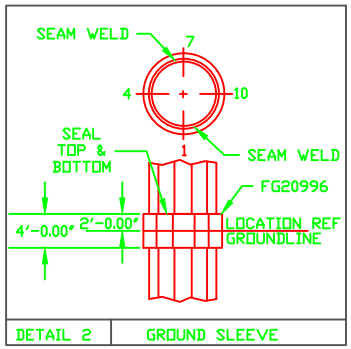

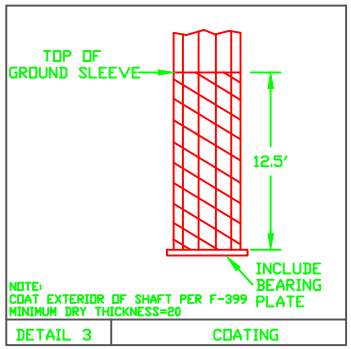

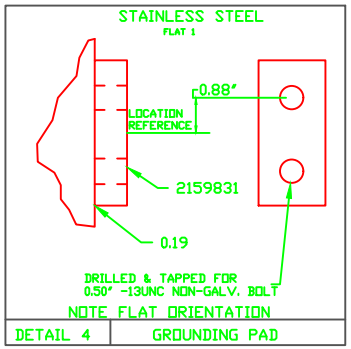

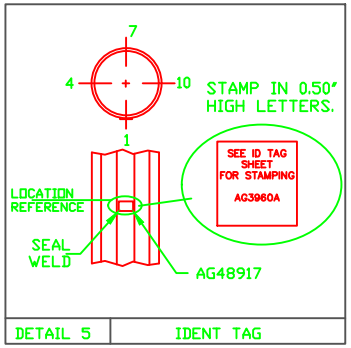

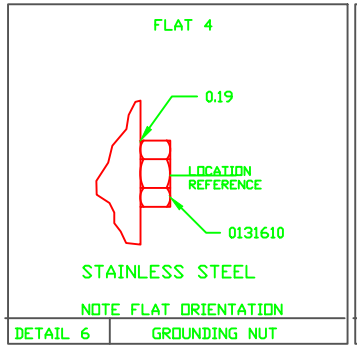

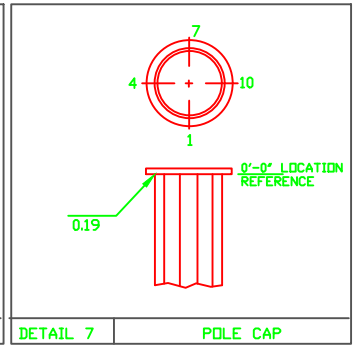

NOTE: DIMENSIONS IN THE DRAWING ARE NOT TRUE TO PROPORTION.

NOTES:

1. FLATS 1 AND 12 ARE ADJACENT TO SEAM WELD
2. ALL CROSS SECTION VIEWS ARE FROM SMALL END OF TUBE.
3. POLE TUBE DATA REF MATERIAL=S-99

TUBE LENGTH	END OD (IN) LARGE	END OD (IN) SMALL	THICKNESS (IN)
85'			

TUBE DIAMETERS MEASURED ACROSS FLATS

GREENVILLE UTILITIES COMMISSION
GREENVILLE, NORTH CAROLINA

Greenville Utilities

CIRCUIT 16, STRUCTURE 9
GROUNDING AND COATINGS DETAIL

DWN. JLS		DATE: 12/09/2019	
CKD. KW		APPD. KW	
SCALE: N.T.S.			
DATE	REVISION	DATE	REVISION

DWG. NO.

9G

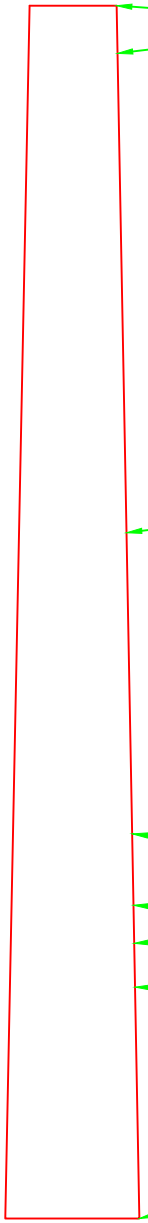

LOCATION DIMENSION			
FROM LARGE END	FROM SMALL END	TOLERANCES BLANK-M-1	DETAIL
	0'-0.00"		7
	1'-6.00"		4
33'-0.00"			4
14.0'			5
12.0'			4
11.0'			3
9.0'			2
9.0'			GL
0'-00"			1

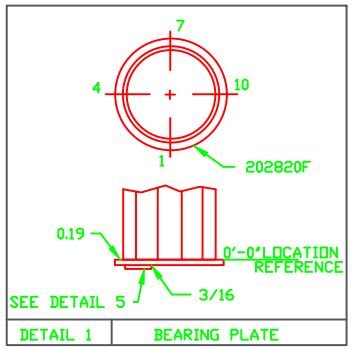

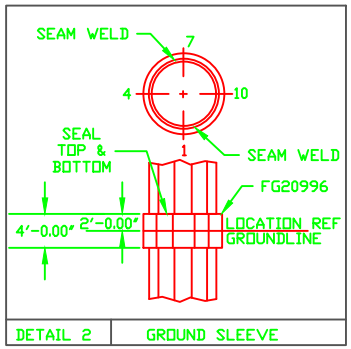

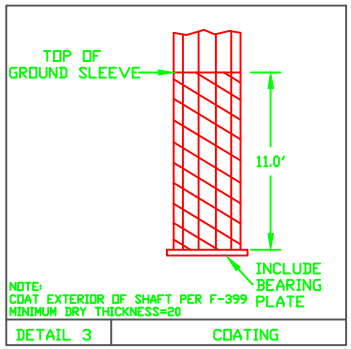

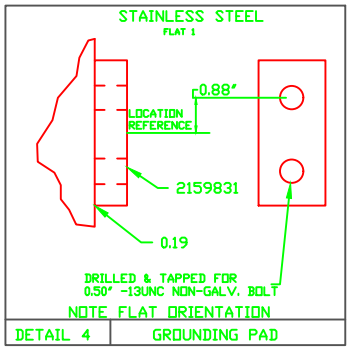

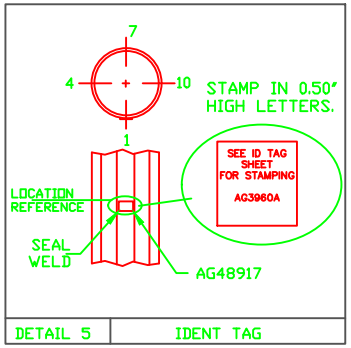

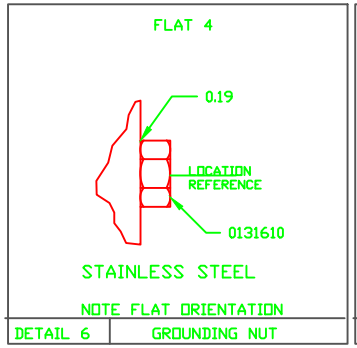

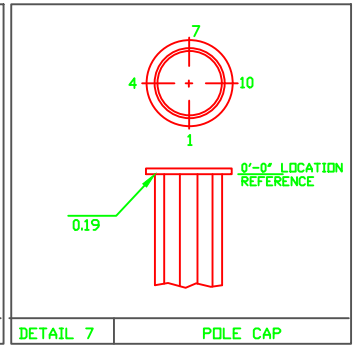

NOTE: DIMENSIONS IN THE DRAWING ARE NOT TRUE TO PROPORTION.

NOTES:

1. FLATS 1 AND 12 ARE ADJACENT TO SEAM WELD
2. ALL CROSS SECTION VIEWS ARE FROM SMALL END OF TUBE.
3. POLE TUBE DATA REF MATERIAL=S-99

TUBE LENGTH	END OD (IN) LARGE	END OD (IN) SMALL	THICKNESS (IN)
70'			

TUBE DIAMETERS MEASURED ACROSS FLATS

GREENVILLE UTILITIES COMMISSION
GREENVILLE, NORTH CAROLINA

Greenville Utilities

CIRCUIT 16, STRUCTURE 1 & 2
GROUNDING AND COATINGS DETAIL

DWN. JLS		DATE: 12/09/19	
CKD. KW		APPD. KW	
SCALE: N.T.S.			
DATE	REVISION	DATE	REVISION

DWG. NO.

1G

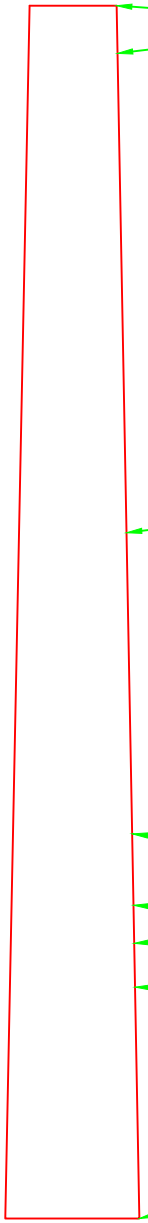

LOCATION DIMENSION			
FROM LARGE END	FROM SMALL END	TOLERANCES BLANK-M-1	DETAIL
	0'-0.00"		7
	1'-6.00"		4
	22'-0.00"		4
15.5'			5
13.5'			4
12.5'			3
10.5'			2
10.5'			GL
0'-00"			1

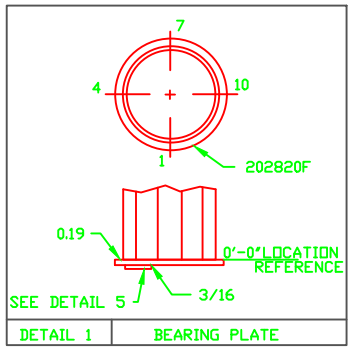

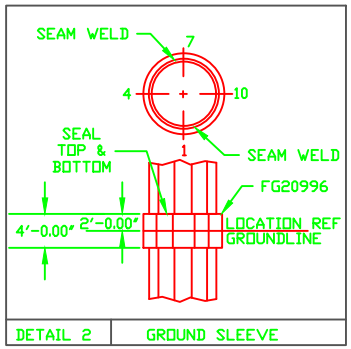

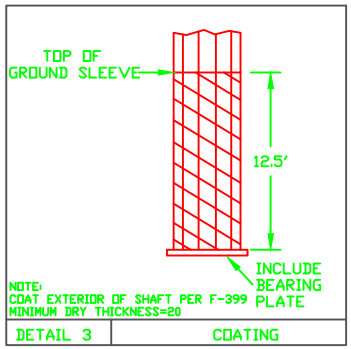

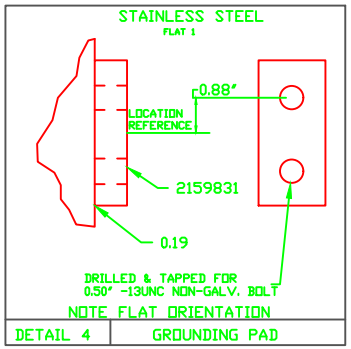

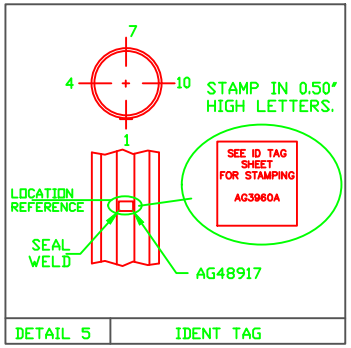

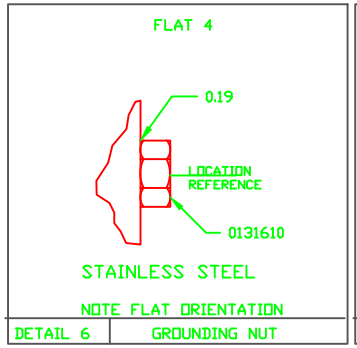

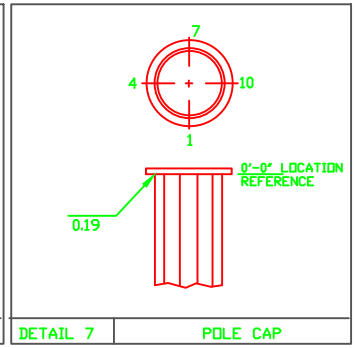

NOTE: DIMENSIONS IN THE DRAWING ARE NOT TRUE TO PROPORTION.

NOTES:

1. FLATS 1 AND 12 ARE ADJACENT TO SEAM WELD
2. ALL CROSS SECTION VIEWS ARE FROM SMALL END OF TUBE.
3. POLE TUBE DATA REF MATERIAL=S-99

TUBE LENGTH	END OD (IN) LARGE	END OD (IN) SMALL	THICKNESS (IN)
85'			

TUBE DIAMETERS MEASURED ACROSS FLATS

GREENVILLE UTILITIES COMMISSION
GREENVILLE, NORTH CAROLINA

Greenville Utilities

CIRCUIT 17, STRUCTURE 3
GROUNDING AND COATINGS DETAIL

DWN. JLS		DATE: 12/10/19	
CKD. KW		APPD. KW	
SCALE: N.T.S.			
DATE	REVISION	DATE	REVISION

DWG. NO.

3G

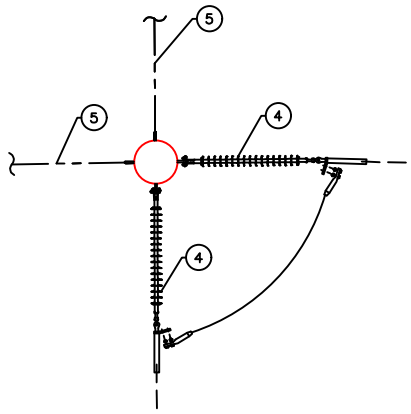

OVERHEAD VIEW

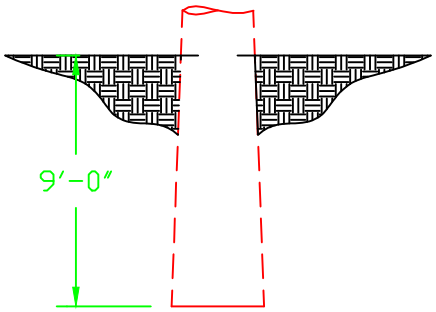

70' Structure Embedment

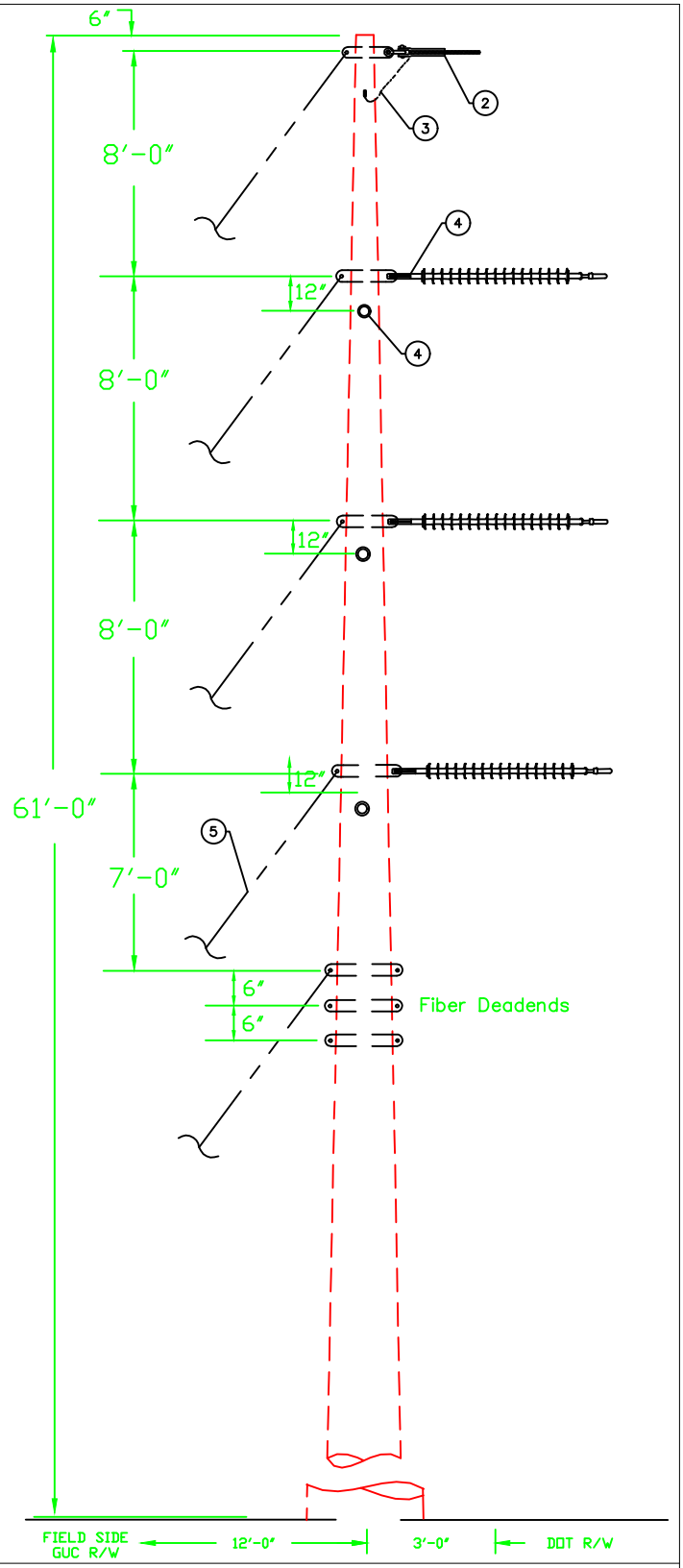

NOTE:

1. THE ANGLE BETWEEN CONDUCTOR VANGS IS 90°.
2. DRAWING IS NOT TO SCALE.
3. SINGLE BOLT OHGW SUPPORT WILL BE FIELD DRILLED FOR STATIC RUNNING TO CKT 16 STRUCTURE 2.
4. SPAN GUY WILL BE USED OPPOSITE OF EACH CONDUCTOR FROM SUBSTATION.

DWG. REF.	ea.	LIST OF MATERIALS DESCRIPTION	ITEM	DET.
1	1	SINGLE BOLT OHGW SUPPORT	–	TM–6A(S)
2	1	OHGW ASSEMBLY, DEADEND	–	TM–4E
3	2	OHGW GROUNDING ASSEMBLY	–	TM–2B
4	6	DEADEND ASSEMBLY, PRIMARY	–	TM–1EM
5	5	SINGLE DOWN GUY	–	TG–21A
	4	SPAN GUY	–	
	1	DRIVEN GROUND ROD ASSEMBLY	–	TM–9
	5	ANCHOR ASSEMBLY, TRANSMISSION	–	TA–2H

GREENVILLE UTILITIES COMMISSION
GREENVILLE, NORTH CAROLINA

Greenville Utilities

CIRCUIT 15 STRUCTURE 1
115 KV 3 PHASE, VERTICAL STRUCTURE LARGE ANGLE, DOUBLE DEADEND SUSPENSION

DWN. JLS		DATE: 11/22/2019	
CKD. KW		APPD. KW	
SCALE: N.T.S.			
DATE	REVISION	DATE	REVISION

DWG. NO.

TSV4

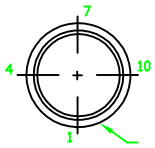

THRU HOLE BORING DETAIL		
DIAMETER	FROM SMALL END	FLAT#
1.00"	8'–0.00"	4
1.00"	9'–0.00"	4
1.00"	14'–0.00"	4
1.00"	15'–0.00"	4
1.00"	20'–0.00"	4
1.00"	21'–0.00"	4

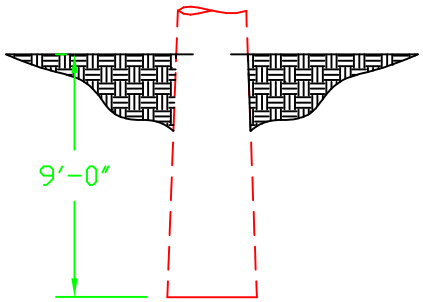

70' STRUCTURE EMBEDMENT

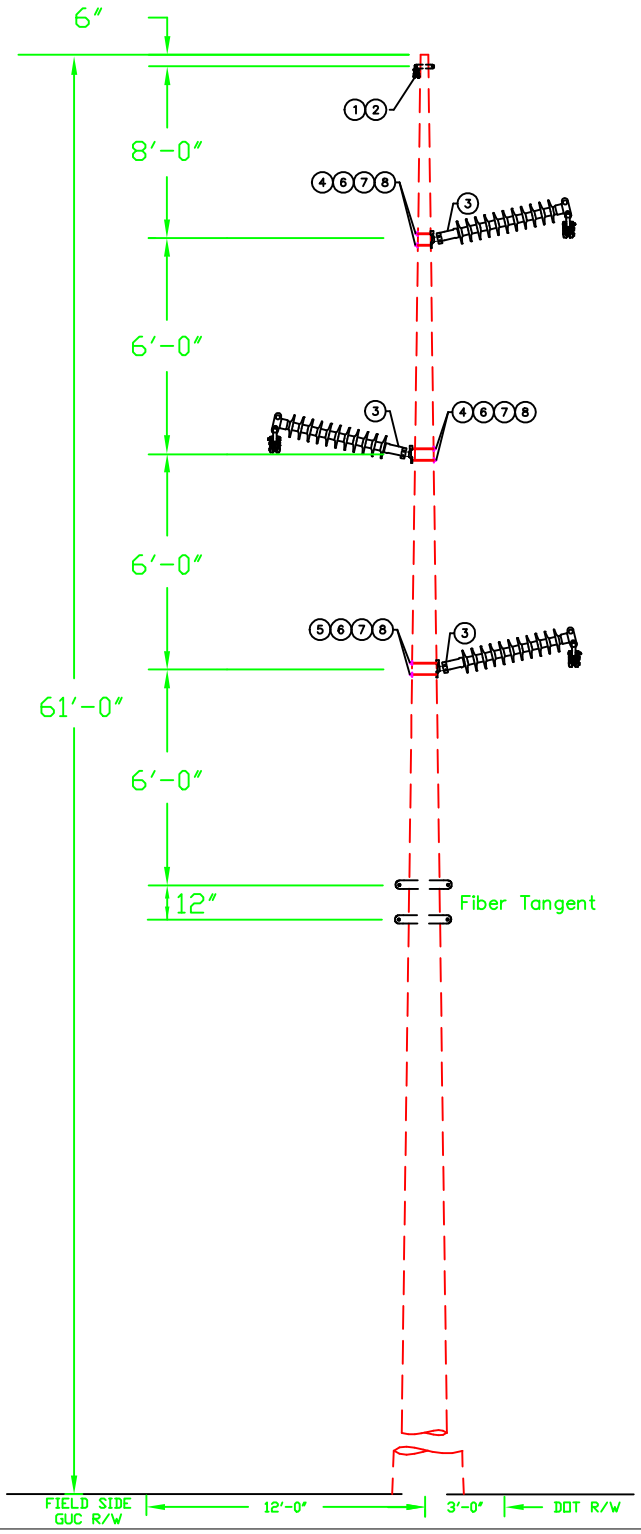

NOTES:

1. DRAWING IS NOT TO SCALE. ALL DIMENSIONS ARE O.C. OF INSULATOR MOUNTS.

DWG. REF.	LIST OF MATERIALS			
	ea.	DESCRIPTION	ITEM	DET.
1	1	OHGW ASSEMBLY, TANGENT	–	TM–4A
2	1	OHGW GROUNDING ASSEMBLY	–	TM–9X(S)
3	3	115 KV POST INSULATOR, TANGENT	–	TM–3DM
4	4	BOLT, MACHINE, 3/4" x 20"	–	
5	2	BOLT, MACHINE, 3/4" x 22"	–	
6	6	WASHER, SQUARE, 4" x 4" x 1/4" w/ 13/16"	–	
7	6	SPRING LOCK WASHER, 3/4"	–	
8	6	NUT, 3/4"	–	
	1	DRIVEN GROUND ROD ASSEMBLY	–	TM–9

GREENVILLE UTILITIES COMMISSION
GREENVILLE, NORTH CAROLINA

Greenville Utilities

CIRCUIT 15, STRUCTURE 2 & 3
115 KV 3 PHASE, Z–FRAME STRUCTURE,
TANGENT, POST INSULATORS

DWN. JLS		DATE: 11/25/2019	
CKD. KW		APPD. KW	
SCALE: N.T.S.			
DATE	REVISION	DATE	REVISION
10/08/2020	A		

DWG. NO.

TPZ1

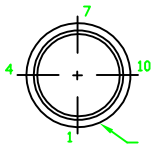

THRU HOLE BORING DETAIL		
DIAMETER	FROM SMALL END	FLAT#
1.00"	8'–0.00"	4
1.00"	9'–0.00"	4
1.00"	14'–0.00"	4
1.00"	15'–0.00"	4
1.00"	20'–0.00"	4
1.00"	21'–0.00"	4

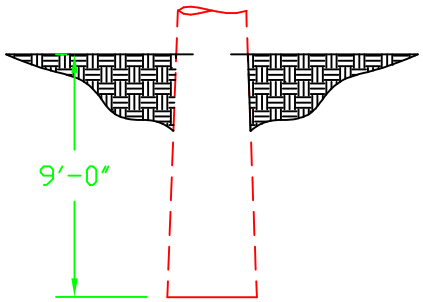

70' STRUCTURE EMBEDMENT

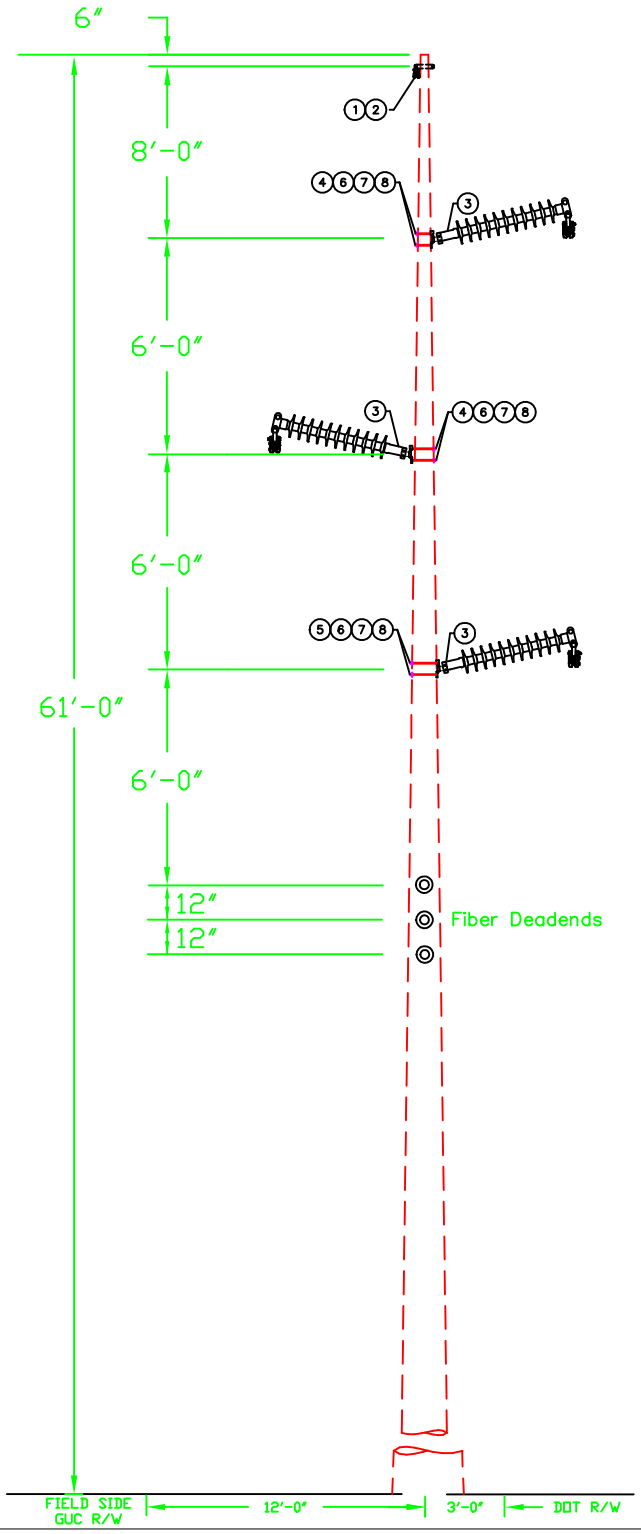

NOTES:

1. DRAWING IS NOT TO SCALE. ALL DIMENSIONS ARE O.C. OF INSULATOR MOUNTS.
2. ANGLE FIBER DEADENDS WILL BE FIELD DRILLED TO APPROPRIATE ANGLE AND ATTACHED WITH EYE BOLTS.

LIST OF MATERIALS

DWG. REF.	ea.	DESCRIPTION	ITEM	DET.
1	1	OHGW ASSEMBLY, TANGENT	–	TM–4A
2	1	OHGW GROUNDING ASSEMBLY	–	TM–9X(S)
3	3	115 KV POST INSULATOR, TANGENT	–	TM–3DM
4	4	BOLT, MACHINE, 3/4" x 20"	–	
5	2	BOLT, MACHINE, 3/4" x 22"	–	
6	6	WASHER, SQUARE, 4" x 4" x 1/4" w/ 13/16"	–	
7	6	SPRING LOCK WASHER, 3/4"	–	
8	6	NUT, 3/4"	–	
	1	DRIVEN GROUND ROD ASSEMBLY	–	TM–9

GREENVILLE UTILITIES COMMISSION
GREENVILLE, NORTH CAROLINA

Greenville Utilities

CIRCUIT 15, STRUCTURE 4
115 KV 3 PHASE, Z–FRAME STRUCTURE,
TANGENT, POST INSULATORS

DWN. JLS		DATE: 11/25/2019	
CKD. KW		APPD. KW	
SCALE: N.T.S.			
DATE	REVISION	DATE	REVISION
10/08/2020	A		

DWG. NO.

TPZ1

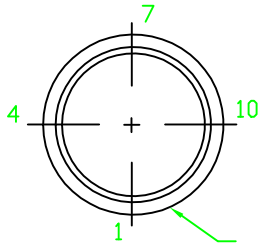

THRU HOLE BORING DETAIL		
DIAMETER	FROM SMALL END	FLAT#
1.00"	8'–0"	4
1.00"	9'–0"	4
1.00"	16'–0"	4
1.00"	17'–0"	4
1.00"	24'–0"	4
1.00"	25'–0"	4
0.75"	33'–0"	4
0.75"	34'–0"	4

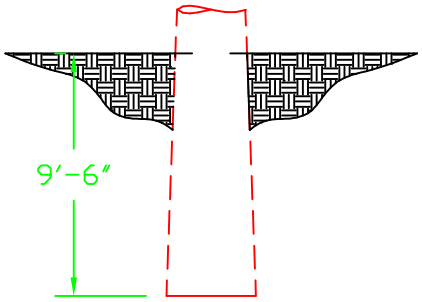

75' Structure Embedment

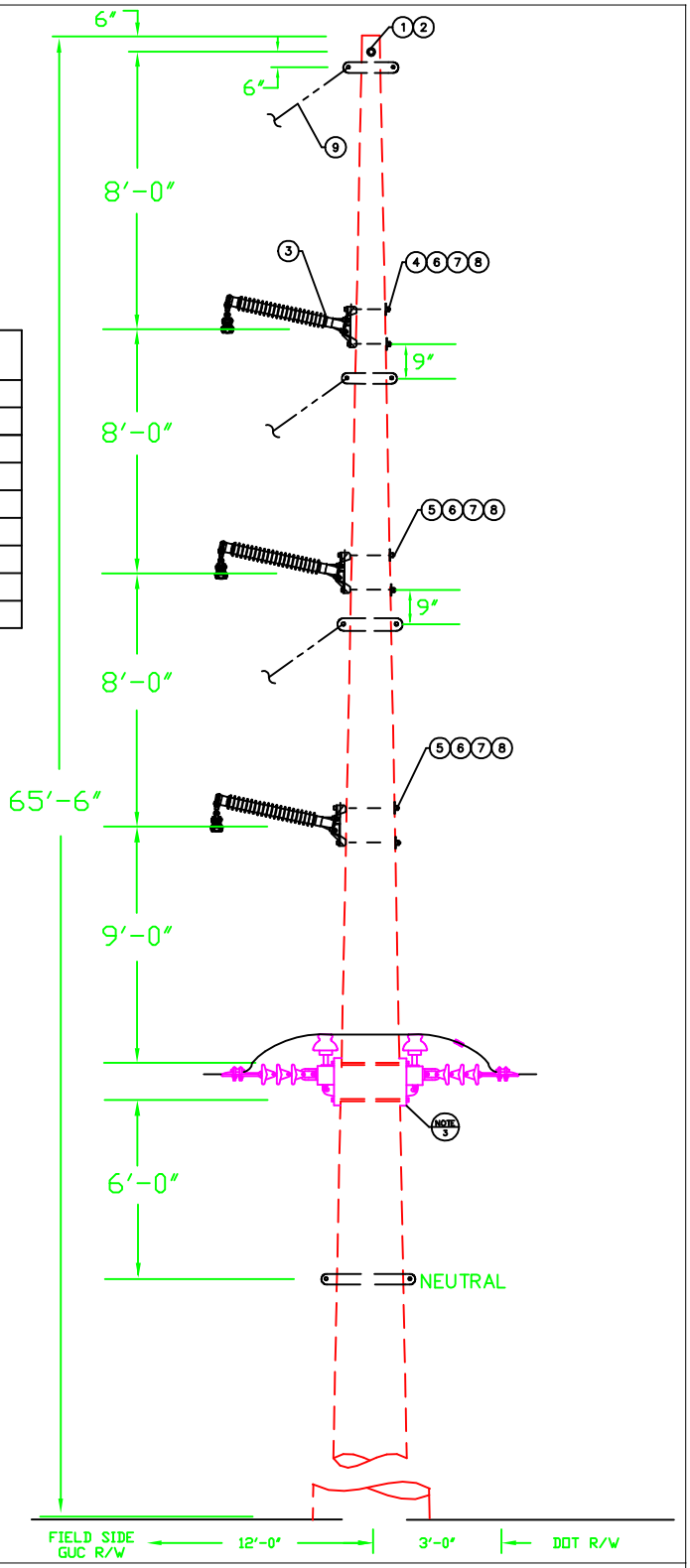

NOTES:

1) DRAWING IS NOT TO SCALE.

2) ALL DIMENSIONS ARE O.C. OF INSULATOR MOUNTS.

3) SEE CROSSARM DETAIL FOR DISTRIBUTION MATERIALS.

DWG. REF.	LIST OF MATERIALS			
	ea.	DESCRIPTION	ITEM	DET.
1	3	OHGW ASSEMBLY, DEADEND	–	TM–4E
2	1	OHGW GROUNDING ASSEMBLY	–	TM–2C
3	3	115 KV POST INSULATOR, TANGENT	–	TM–3DM
4	2	BOLT, MACHINE, 3/4" x 18"	–	
5	4	BOLT, MACHINE, 3/4" x 20"	–	
6	6	SPRING LOCK WASHER, 3/4"	–	
7	6	NUT, 3/4"	–	
8	6	WASHER, SQUARE, 4" x 4" x 1/4" w/ 13/16"	–	
9	3	SPAN GUY	–	
	1	DRIVEN GROUND ROD ASSEMBLY	–	TM–9

GREENVILLE UTILITIES COMMISSION
GREENVILLE, NORTH CAROLINA

Greenville Utilities

CKT 15 STRUCTURE 5
115 KV 3 PHASE, VERTICAL STRUCTURE,
SMALL ANGLE POST, W/DISTRIBUTION UB

DWN. JLS		DATE: 12/23/2019	
CKD. KW		APPD. KW	
SCALE: N.T.S.			
DATE	REVISION	DATE	REVISION
10/08/2020	A		

DWG. NO.

TPVD2.C6

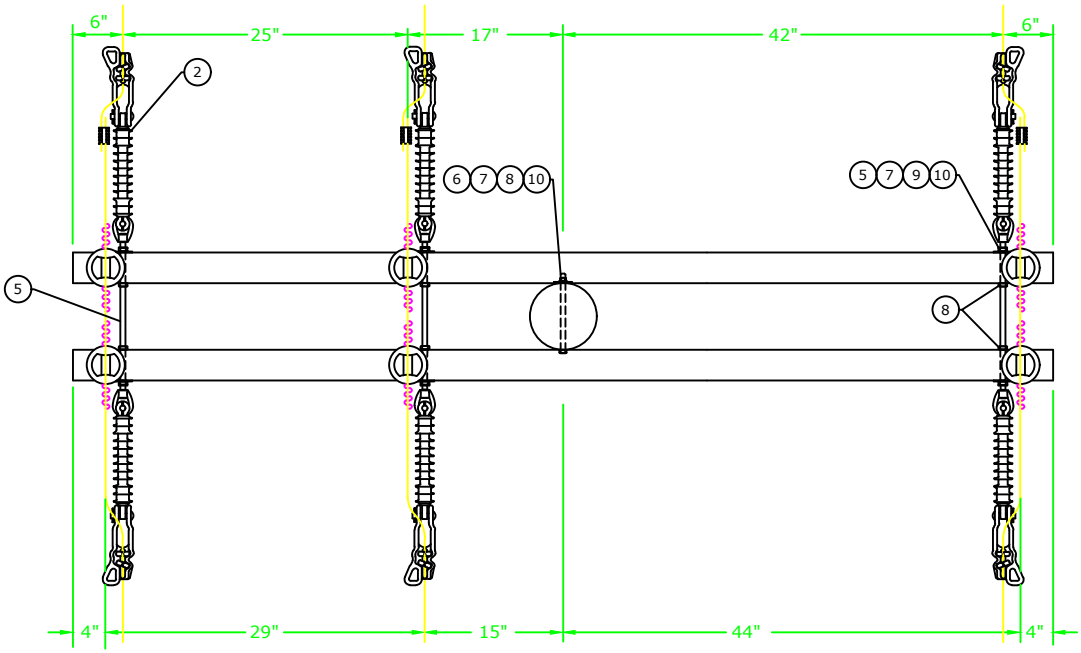

PLAN VIEW

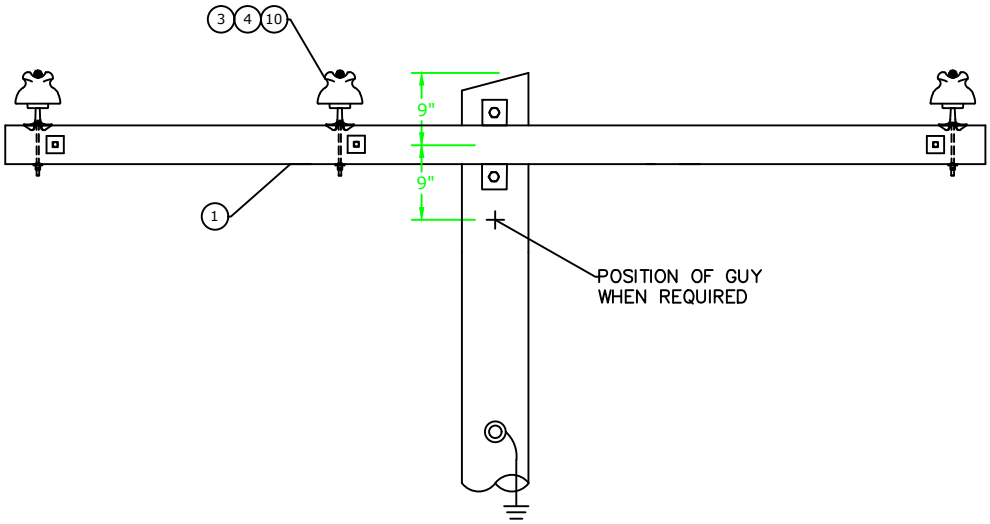

FRONT VIEW

NOTES:

1. GROUNDS ARE TO STOP AT THE NEUTRAL POSITION EXCEPT TO RISE TO A LIGHTNING ARRESTER OR TRANSFORMER.
2. ALL GUYS MUST CONTAIN A GUY STRAIN INSULATOR SUFFICIENT TO PROVIDE TWO FEET OF AIR CLEARANCE.

LIST OF MATERIALS

DWG. REF.	ea.	DESCRIPTION	ITEM	DET.
1	2	8' DISTRIBUTION CROSSARM DE	–	
2	6	DEAD END ASSEMBLY, SECONDARY	–	
3	6	25 KV PIN INSULATOR	–	
4	6	25 KV PINS, LONG SHANK CROSS	–	
5	3	BOLT, DOUBLE ARMING 5/8" x 32"	–	
6	2	BOLT, MACHINE 5/8" x 20"	–	
7	8	SPRING LOCK WASHER, 5/8"	–	
8	8	NUT, 5/8"	–	
9	6	NUT, EYE 5/8"	–	
10	14	WASHER, SQUARE, 3 x 3 x 1/4" w/ 13/16"	–	

GREENVILLE UTILITIES COMMISSION
GREENVILLE, NORTH CAROLINA

Greenville Utilities

CKT 15 STRUCTURE 5
115 KV 3 PHASE, VERTICAL STRUCTURE,
SMALL ANGLE POST, W/DISTRIBUTION UB

DWN. JLS		DATE: 02/13/20	
CKD. KW		APPD. KW	
SCALE: N.T.S.		PAGE 2 OF 2	
DATE	REVISION	DATE	REVISION

DWG. NO.

TPVD2.C6

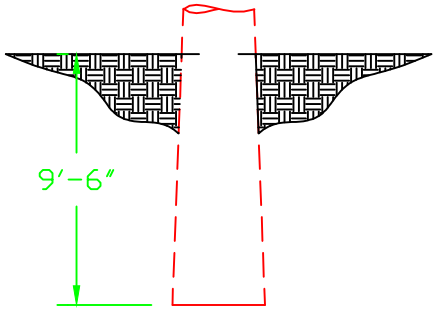

75' Structure Embedment

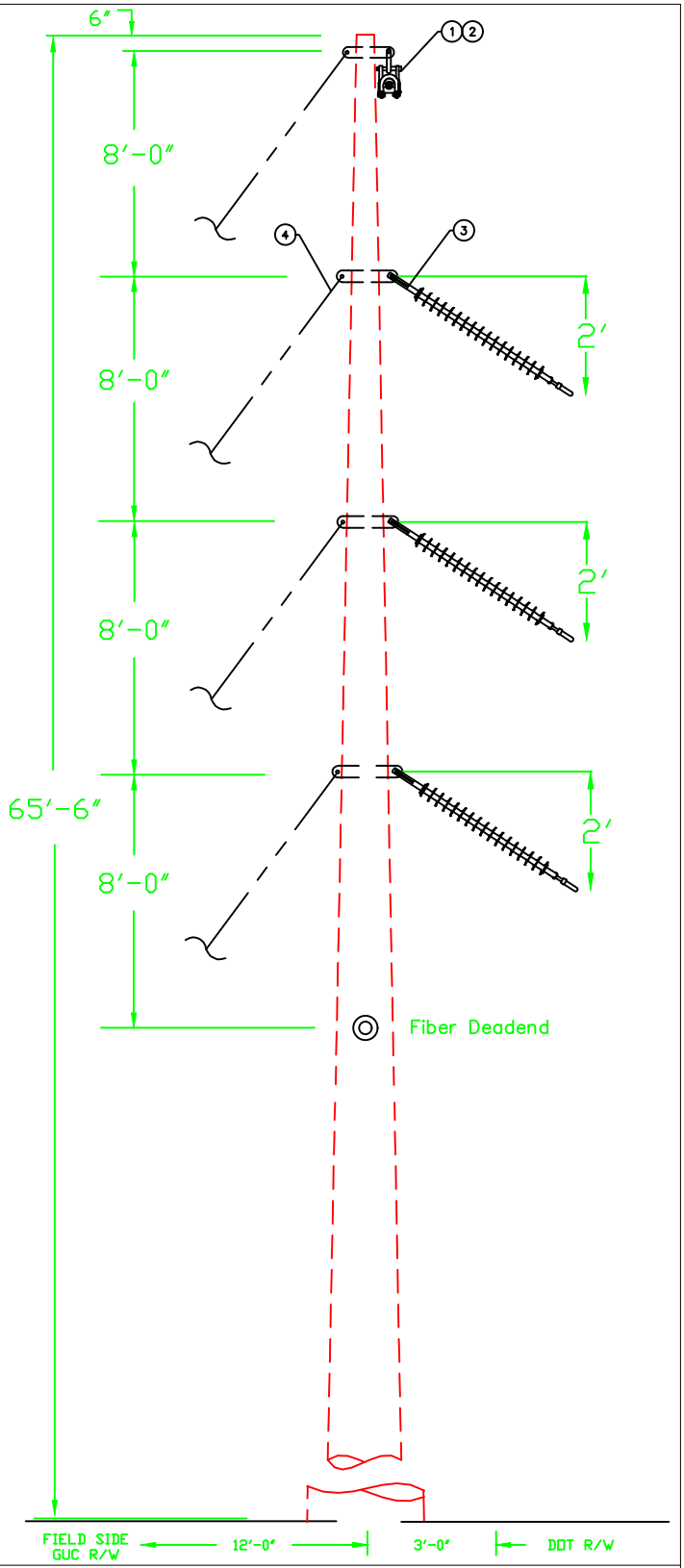

NOTES:

1. DRAWING IS NOT TO SCALE. ALL DIMENSIONS ARE O.C. OF INSULATOR MOUNTS.
2. FIBER DEADEND WILL BE FIELD DRILLED TO APPROPRIATE ANGLE

DWG. REF.	ea.	LIST OF MATERIALS DESCRIPTION	ITEM	DET.
1	1	OHGW ASSEMBLY, ANGLE	–	TM–4A
2	1	OHGW GROUNDING ASSEMBLY	–	TM–9X(S)
3	3	ANGLE ASSEMBLY, PRIMARY	–	TM–1CM
4	4	SINGLE DOWN GUY	–	TG–21A
	1	DRIVEN GROUND ROD ASSEMBLY	–	TM–9
	4	ANCHOR ASSEMBLY, TRANSMISSION	–	TA–2H

GREENVILLE UTILITIES COMMISSION
GREENVILLE, NORTH CAROLINA

Greenville Utilities

CIRCUIT 15 STRUCTURE 6
115 KV 3 PHASE, VERTICAL STRUCTURE LARGE ANGLE, SUSPENSION

DWN. JLS		DATE: 11/25/19	
CKD. KW		APPD. KW	
SCALE: N.T.S.			
DATE	REVISION	DATE	REVISION

DWG. NO.

TSV3

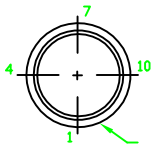

THRU HOLE BORING DETAIL		
DIAMETER	FROM SMALL END	FLAT#
1.00"	8'–0.00"	4
1.00"	9'–0.00"	4
1.00"	14'–0.00"	4
1.00"	15'–0.00"	4
1.00"	20'–0.00"	4
1.00"	21'–0.00"	4

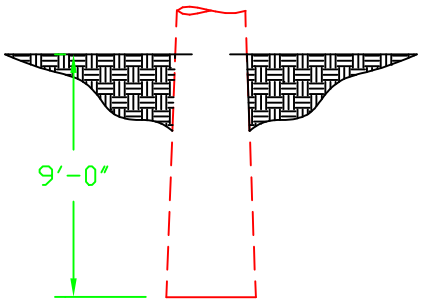

70' STRUCTURE EMBEDMENT

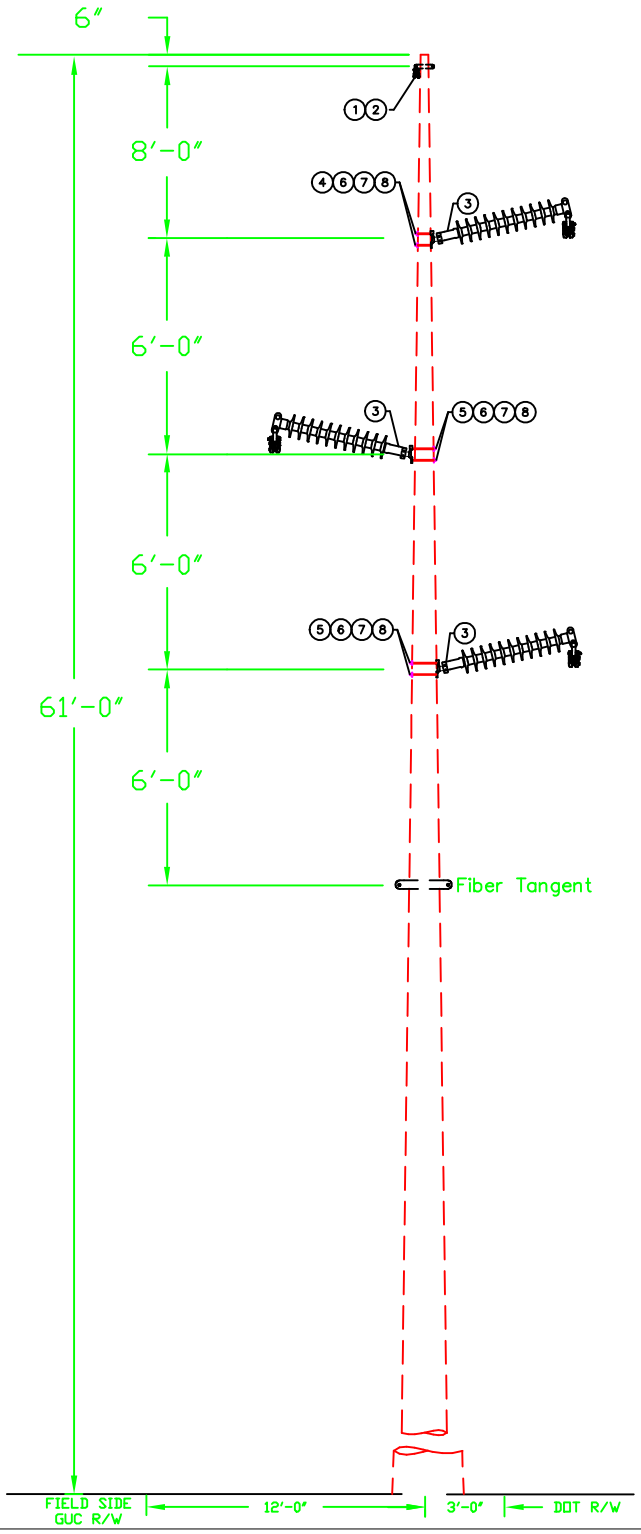

NOTES:

1. DRAWING IS NOT TO SCALE. ALL DIMENSIONS ARE O.C. OF INSULATOR MOUNTS.

DWG. REF.	LIST OF MATERIALS			
	ea.	DESCRIPTION	ITEM	DET.
1	1	OHGW ASSEMBLY, TANGENT	–	TM–4A
2	1	OHGW GROUNDING ASSEMBLY	–	TM–9X(S)
3	3	115 KV POST INSULATOR, TANGENT	–	TM–3DM
4	2	BOLT, MACHINE, 3/4" x 18"	–	
5	4	BOLT, MACHINE, 3/4" x 20"	–	
6	6	WASHER, SQUARE, 4" x 4" x 1/4" w/ 13/16"	–	
7	6	SPRING LOCK WASHER, 3/4"	–	
8	6	NUT, 3/4"	–	
	1	DRIVEN GROUND ROD ASSEMBLY	–	TM–9

GREENVILLE UTILITIES COMMISSION
GREENVILLE, NORTH CAROLINA

Greenville Utilities

CIRCUIT 15, STRUCTURE 7, 8, & 9
115 KV 3 PHASE, Z–FRAME STRUCTURE,
TANGENT, POST INSULATORS

DWN. JLS		DATE: 11/25/2019	
CKD. KW		APPD. KW	
SCALE: N.T.S.			
DATE	REVISION	DATE	REVISION
10/08/2020	A		

DWG. NO.

TPZ1

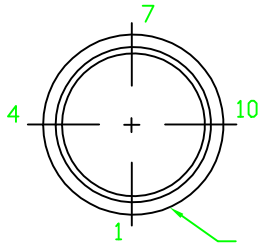

THRU HOLE BORING DETAIL		
DIAMETER	FROM SMALL END	FLAT#
1.00"	8'–0"	4
1.00"	9'–0"	4
1.00"	14'–0"	4
1.00"	15'–0"	4
1.00"	20'–0"	4
1.00"	21'–0"	4
0.75"	29'–0"	1
0.75"	30'–0"	1

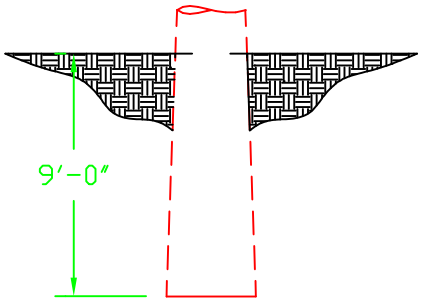

70' Structure Embedment

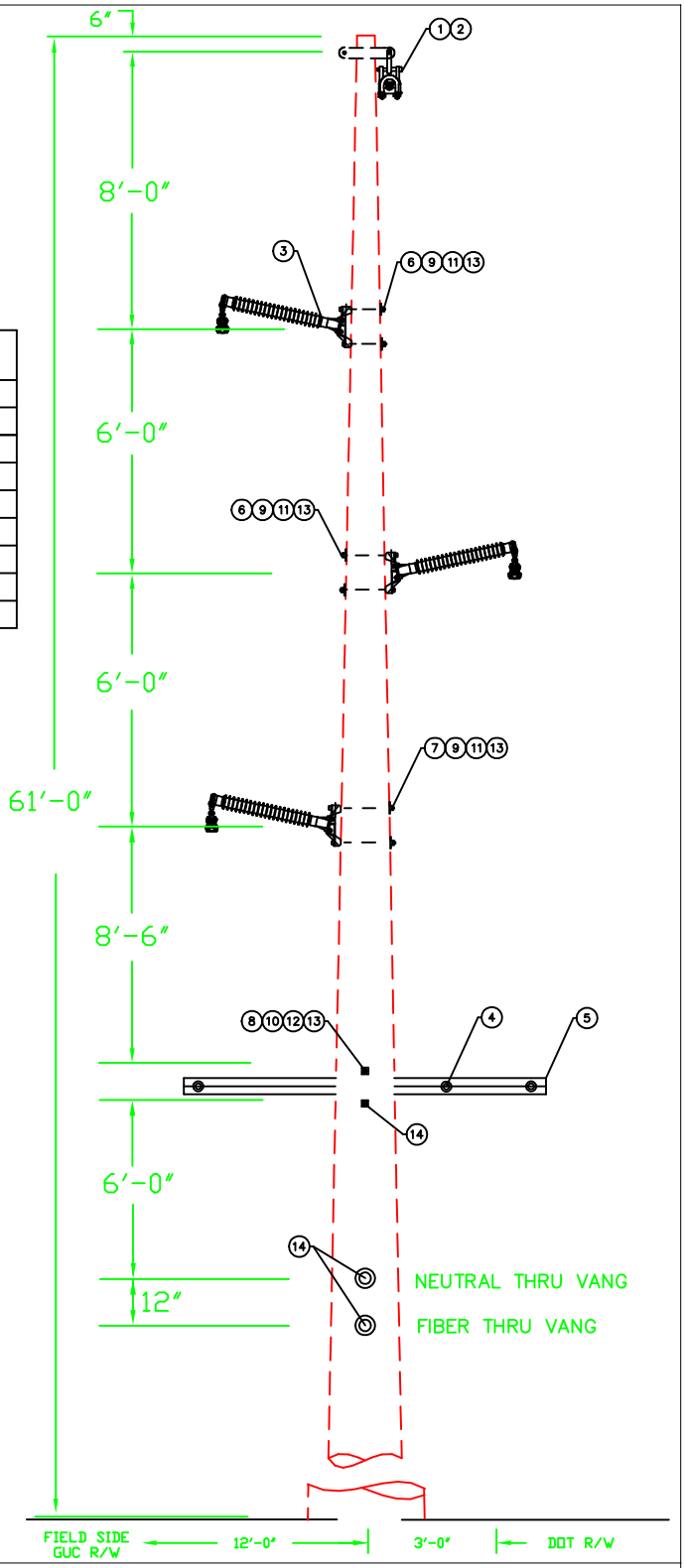

NOTES:

1) DRAWING IS NOT TO SCALE.

2) ALL DIMENSIONS ARE O.C. OF INSULATOR MOUNTS.

3) PARALLEL RISERS ON BACK SIDE OF POLE

DWG. REF.	LIST OF MATERIALS			
	ea.	DESCRIPTION	ITEM	DET.
1	1	OHGW ASSEMBLY, TANGENT	–	TM–4A
2	2	OHGW/NEUTRAL GROUNDING ASSY	–	TM–9X(S)
3	3	115 KV POST INSULATOR, TANGENT	–	TM–3DM
4	3	15 KV SUSPENSION INSULATOR	–	
5	1	8' DISTRIBUTION DE CROSSARM	–	
6	4	BOLT, MACHINE, 3/4" x 20"	–	
7	2	BOLT, MACHINE, 3/4" x 22"	–	
8	2	BOLT, MACHINE, 5/8" x 20"	–	
9	6	SPRING LOCK WASHER, 3/4"	–	
10	2	SPRING LOCK WASHER, 5/8"	–	
11	6	NUT, 3/4"	–	
12	2	NUT, 5/8"	–	
13	8	WASHER, SQUARE, 4" x 4" x 1/4" w/ 13/16"	–	
14	4	SINGLE DOWN GUY	–	TG–21A
	1	DRIVEN GROUND ROD ASSEMBLY	–	TM–9
	2	ANCHOR ASSEMBLY TRANSMISSION	–	TA–2H

GREENVILLE UTILITIES COMMISSION
GREENVILLE, NORTH CAROLINA

Greenville Utilities

CKT 15 STRUCTURE 10
115 KV 3 PHASE, Z–FRAME STRUCTURE,
TANGENT POST, W/DISTRIBUTION UB

DWN. JLS		DATE: 12/03/2019	
CKD. KW		APPD. KW	
SCALE: N.T.S.			
DATE	REVISION	DATE	REVISION
10/08/2020	A		

DWG. NO.

TPZD1.C1

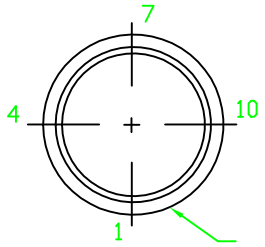

THRU HOLE BORING DETAIL		
DIAMETER	FROM SMALL END	FLAT#
1.00"	8'–0"	4
1.00"	9'–0"	4
1.00"	14'–0"	4
1.00"	15'–0"	4
1.00"	20'–0"	4
1.00"	21'–0"	4
0.75"	29'–0"	1
0.75"	30'–0"	1

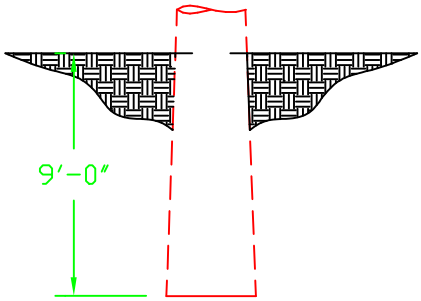

70' Structure Embedment

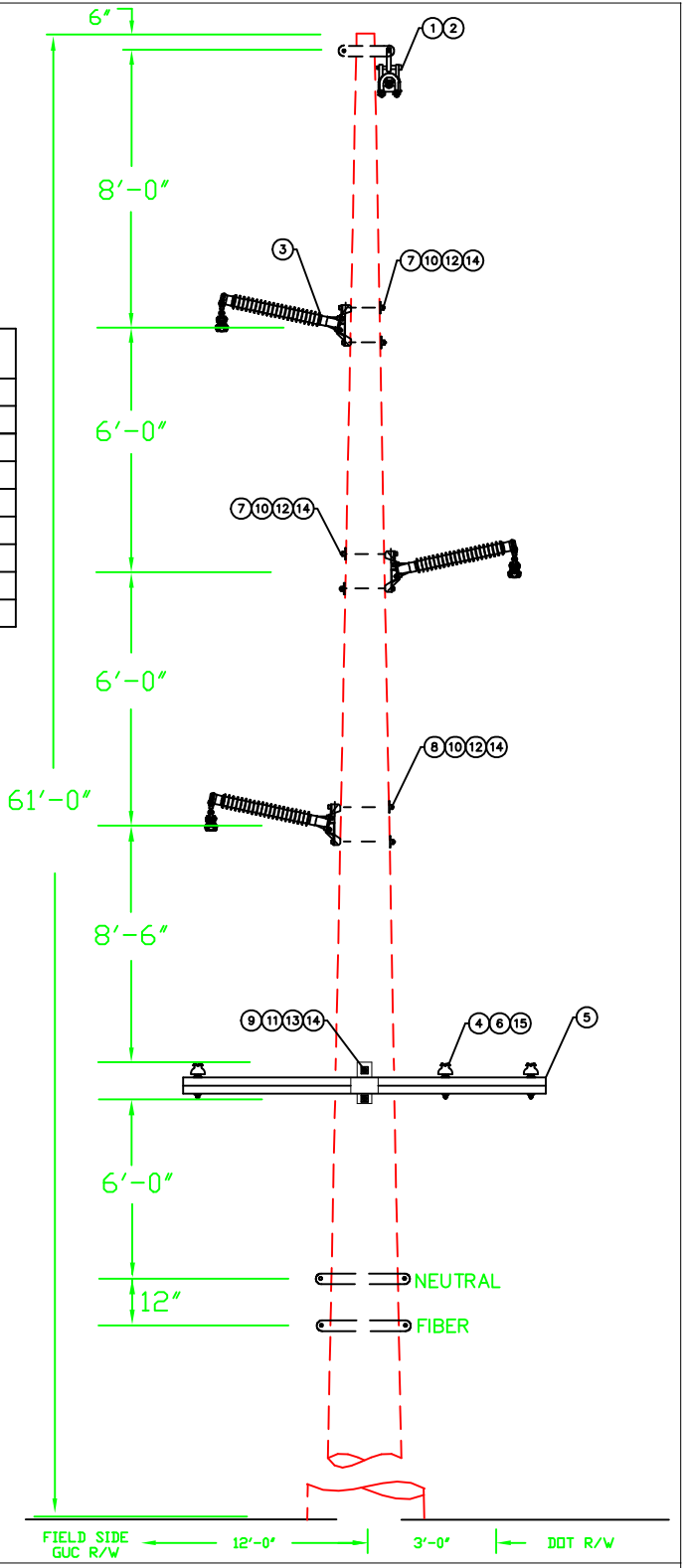

NOTES:

1) DRAWING IS NOT TO SCALE.

2) ALL DIMENSIONS ARE O.C. OF INSULATOR MOUNTS.

DWG. REF.	LIST OF MATERIALS			
	ea.	DESCRIPTION	ITEM	DET.
1	1	OHGW ASSEMBLY, TANGENT	–	TM–4A
2	2	OHGW/NEUTRAL GROUNDING ASSY	–	TM–9X(S)
3	3	115 KV POST INSULATOR, TANGENT	–	TM–3DM
4	3	25 KV POST INSULATOR	–	
5	1	8' DISTRIBUTION CROSSARM	–	
6	3	PINS, 25 KV CROSS	–	
7	4	BOLT, MACHINE, 3/4" x 20"	–	
8	2	BOLT, MACHINE, 3/4" x 22"	–	
9	2	BOLT, MACHINE, 5/8" x 20"	–	
10	6	SPRING LOCK WASHER, 3/4"	–	
11	2	SPRING LOCK WASHER, 5/8"	–	
12	6	NUT, 3/4"	–	
13	2	NUT, 5/8"	–	
14	8	WASHER, SQUARE, 4" x 4" x 1/4" w/ 13/16"	–	
15	3	WASHER, SQUARE, 3" x 3" x 1/4" w/ 13/16"	–	
	1	DRIVEN GROUND ROD ASSEMBLY	–	TM–9

GREENVILLE UTILITIES COMMISSION
GREENVILLE, NORTH CAROLINA

Greenville Utilities

CKT 15 STRUCTURE 11–14
115 KV 3 PHASE, Z–FRAME STRUCTURE,
TANGENT POST, W/DISTRIBUTION UB

DWN. JLS		DATE: 12/03/2019	
CKD. KW		APPD. KW	
SCALE: N.T.S.			
DATE	REVISION	DATE	REVISION
10/08/2020	A		

DWG. NO.

TPZD1.C1

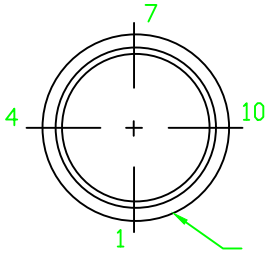

OVERHEAD VIEW

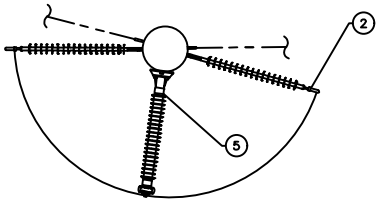

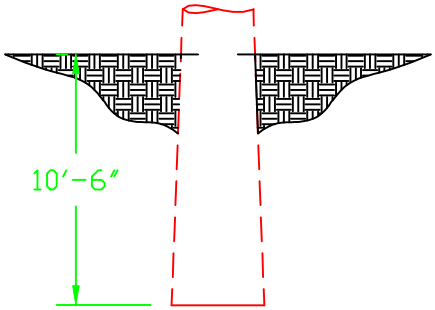

85' Structure Embedment

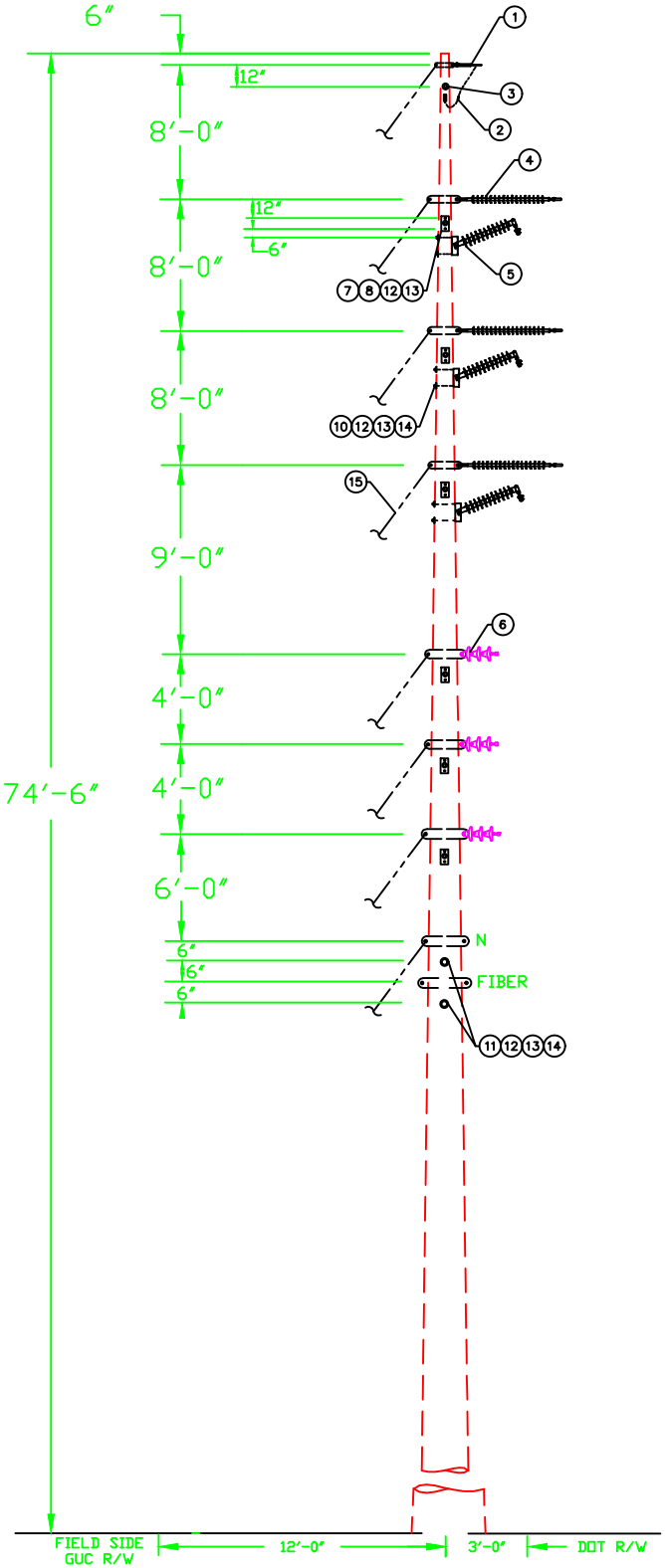

NOTE:

1. DRAWING IS NOT TO SCALE.
2. HOLES WILL BE FIELD DRILLED TO APPROPRIATE ANGLE.
3. GUYS OPPOSITE EACH CONDUCTOR DEADEND.

DWG. REF.	LIST OF MATERIALS			
	ea.	DESCRIPTION	ITEM	DET.
1	2	OHGW ASSEMBLY, DEADEND	–	TM–4E
2	2	OHGW GROUNDING/NEUTRAL ASSEMBLY	–	TM–2B
3	1	SINGLE BOLT OHGW SUPPORT	–	
4	6	DEADEND ASSEMBLY, PRIMARY	–	TM–1EM
5	3	115 KV POST INSULATOR, TANGENT	–	TM–3DM
6	6	DEADEND ASSEMBLY, SECONDARY	–	
7	13	GUY PLATE, TRANSMISSION	–	TG–27D
8	5	BOLT, MACHINE, 3/4" x 18"	–	
9	8	BOLT, MACHINE, 3/4" x 20"	–	
10	6	BOLT, MACHINE, 3/4" x 22"	–	
11	2	EYE BOLT, MACHINE, 3/4" x 20"	–	
12	9	SPRING LOCK WASHER, 3/4"	–	
13	9	NUT, 3/4"	–	
14	9	WASHER SQUARE, 4"x4"x1/4", w/13/16"	–	
15	16	SINGLE DOWN GUY	–	TG–21A
	1	DRIVEN GROUND ROD ASSEMBLY	–	TM–9
	14	ANCHOR ASSEMBLY, TRANSMISSION	–	TA–2H

GREENVILLE UTILITIES COMMISSION
GREENVILLE, NORTH CAROLINA

Greenville Utilities

CIRCUIT 15 STRUCTURE 15
115 KV 3 PHASE, VERTICAL STRUCTURE, SMALL ANGLE DOUBLE DEADEND SUSPENSION, W/POST

DWN. JLS		DATE: 08/21/20	
CKD. KW		APPD. KW	
SCALE: N.T.S.			
DATE	REVISION	DATE	REVISION

DWG. NO.

TSVD6.V6

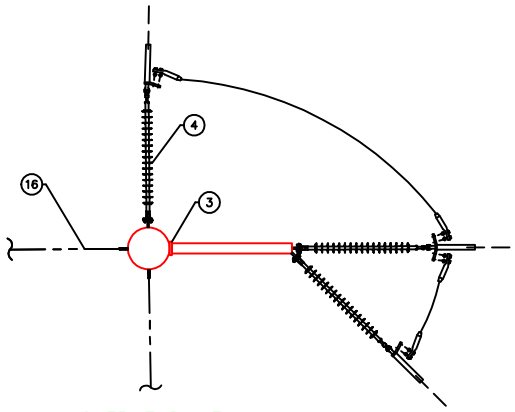

OVERHEAD VIEW

THRU HOLE BORING DETAIL		
DIAMETER	FROM SMALL END	FLAT#
1.25"	9'–0"	4
1.25"	10'–2"	4
1.25"	17'–0"	4
1.25"	18'–2"	4
1.25"	25'–0"	4
1.25"	26'–2"	4
0.75"	33'–6"	1
0.75"	34'–6"	1

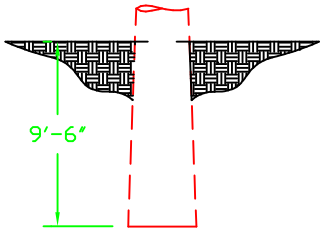

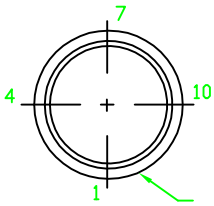

75' Structure Embedment

NOTES:

1) DRAWING IS NOT TO SCALE.

2) DAVIT ARM MUST BE TRINITY MEYER CATALOG # MDCG40 OR EQUIVALENT.

3) 3 PHASE DIST RISER NOT SHOWN IN DRAWING

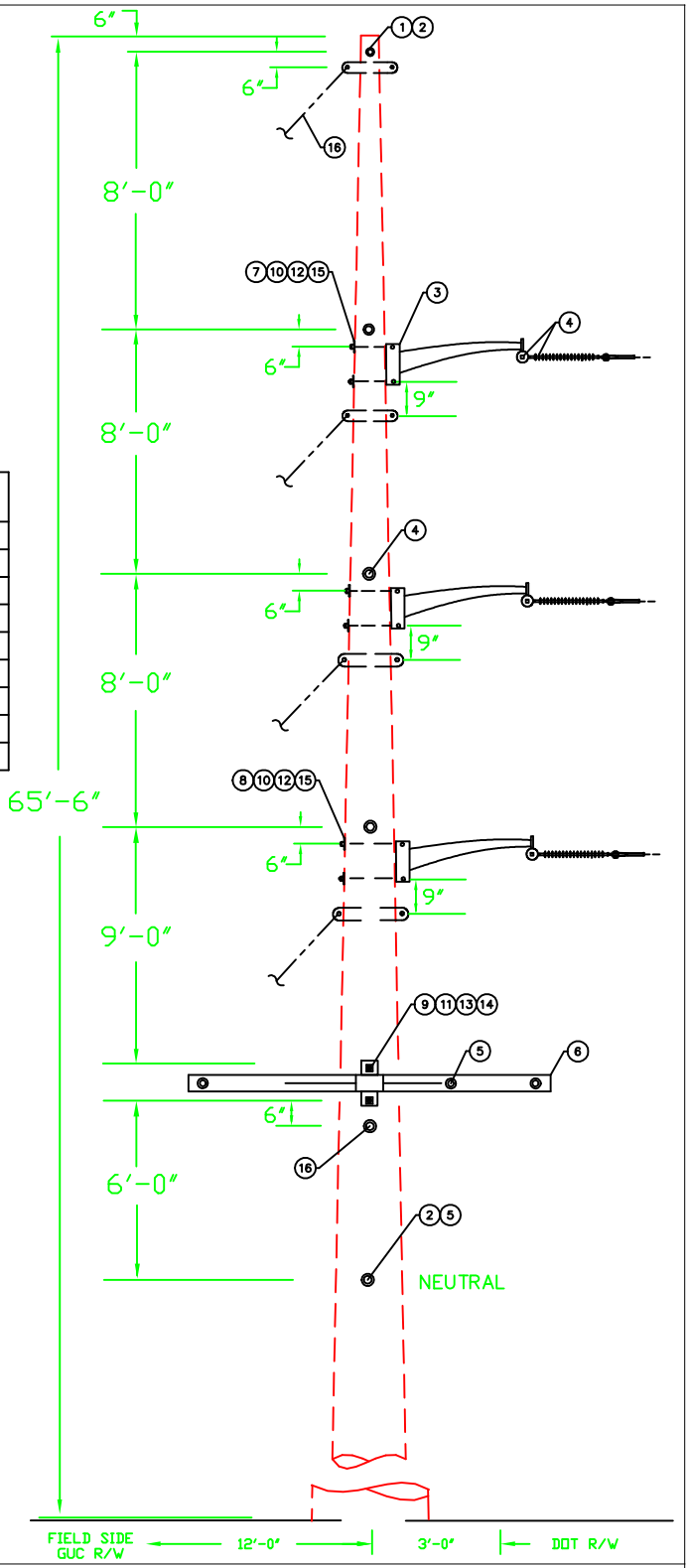

DWG. REF.	LIST OF MATERIALS			
	ea.	DESCRIPTION	ITEM	
1	2	OHGW ASSEMBLY, DEADEND	–	DET.
2	2	OHGW/NEUTRAL GROUNDING ASSEMBLY	–	TM–4E
3	3	4' DAVIT ARM *SEE NOTE 2	–	TM–2B
4	9	DEADEND ASSEMBLY, PRIMARY	–	
5	3	DEADEND ASSEMBLY SECONDARY	–	TM–1EM
6	1	8' DISTRIBUTION CROSSARM DE	–	
7	2	BOLT, MACHINE, 1" x 20"	–	
8	4	BOLT, MACHINE, 1" x 22"	–	
9	2	BOLT, MACHINE, 5/8" x 20"	–	
10	6	SPRING LOCK WASHER, 1"	–	
11	2	SPRING LOCK WASHER, 5/8"	–	
12	6	NUT, 1"	–	
13	2	NUT, 5/8"	–	
14	2	WASHER, SQUARE, 4" x 4" x 1/4" w/ 13/16"	–	
15	6	WASHER, SQUARE, 4" x 4" x 1/4" w/ 1–3/16"	–	
16	11	SINGLE DOWN GUY	–	TG–21A
	1	DRIVEN GROUND ROD ASSEMBLY	–	TM–9
	10	ANCHOR ASSEMBLY TRANSMISSION	–	TA–2H

GREENVILLE UTILITIES COMMISSION
GREENVILLE, NORTH CAROLINA

Greenville Utilities

CKT 15 STRUCTURE 16
115 KV 3 PHASE, VERTICAL DOUBLE CIRCUIT
STRUCTURE, LARGE ANGLE, DOUBLE DEADEND,
DISTRIBUTION ON CROSSARM

DWN. JLS		DATE: 08/21/2020	
CKD. KW		APPD. KW	
SCALE: N.T.S.			
DATE	REVISION	DATE	REVISION
10/08/2020	A		

DWG. NO.

TSVD4.C5.2

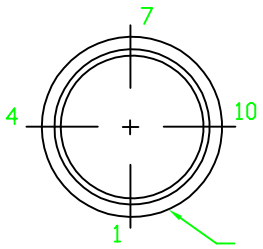

THRU HOLE BORING DETAIL		
DIAMETER	FROM SMALL END	FLAT#
1.00"	11'–4.00"	1
1.00"	21'–4.00"	1
1.00"	31'–4.00"	1
0.75"	42'–6.00"	1
0.75"	43'–2.00"	1
0.75"	54'–6.00"	1
0.75"	55'–2.00"	1
0.75"	66'–0.00"	1
0.75"	66'–8.00"	1

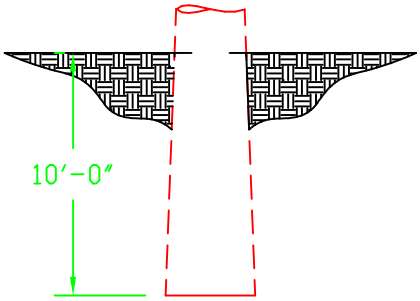

80' Structure Embedment

NOTES:

1. DRAWING IS NOT TO SCALE. ALL DIMENSIONS ARE O.C. OF INSULATOR MOUNTS.
2. SEE SWITCH DRAWING FOR SWITCH DETAILS

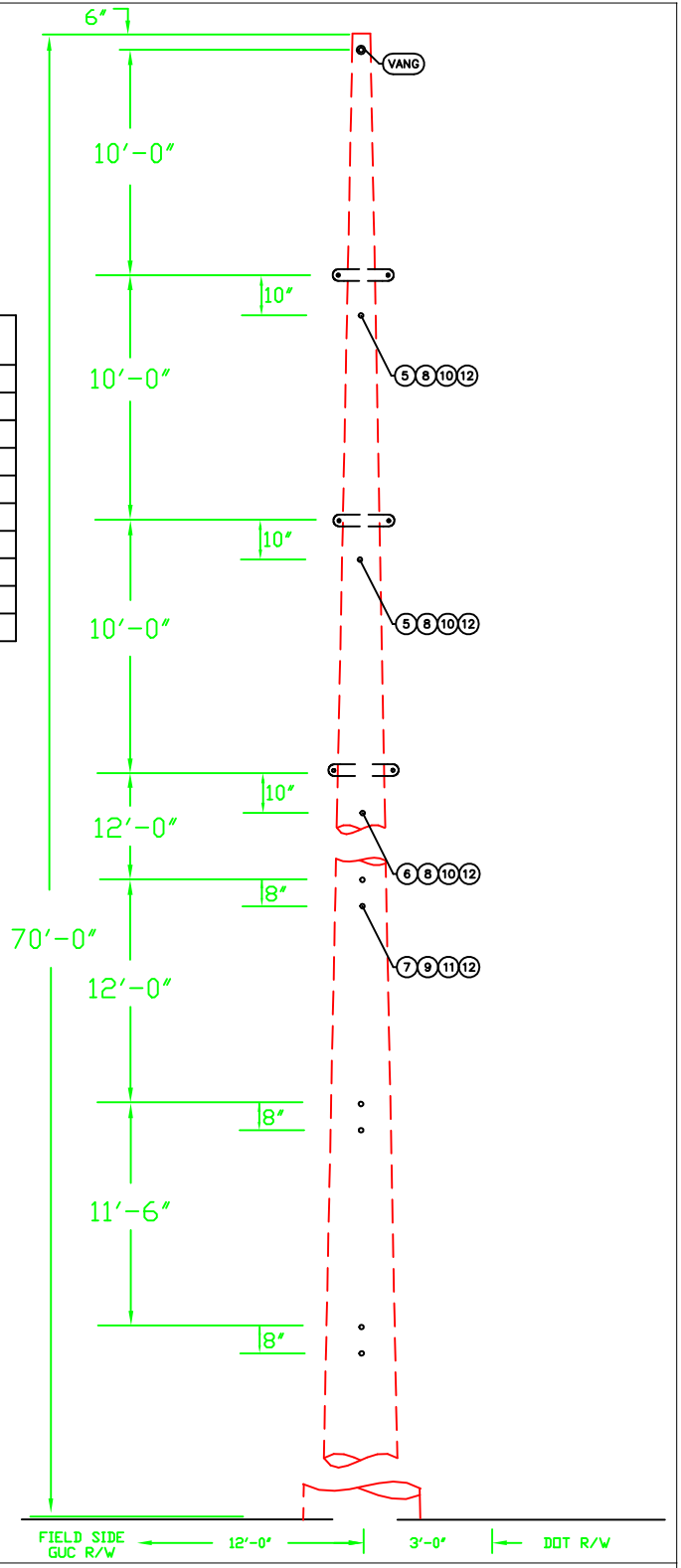

DWG. REF.	LIST OF MATERIALS			
	ea.	DESCRIPTION	ITEM	DET.
1	1	OHGW ASSEMBLY, TANGENT	–	TM–4A
2	1	OHGW GROUNDING ASSEMBLY	–	TM–9X(S)
3	6	DEADEND ASSEMBLY, PRIMARY	–	TM–1EM
4	1	GANG SWITCH	–	
5	2	BOLT MACHINE, 3/4" x 22"	–	
6	1	BOLT MACHINE, 3/4" x 24"	–	
7	6	BOLT MACHINE, 5/8" x 22"	–	
8	3	SPRING LOCK WASHER, 3/4"	–	
9	6	SPRING LOCK WASHER 5/8"	–	
10	3	NUT, 3/4"	–	
11	6	NUT, 5/8"	–	
12	9	WASHER, SQUARE, 4" x 4" x 1/4" w/ 13/16"	–	
	1	DRIVEN GROUND ROD ASSEMBLY	–	TM–9

GREENVILLE UTILITIES COMMISSION
GREENVILLE, NORTH CAROLINA

Greenville Utilities

CIRCUIT 15 STRUCTURE 17
115 KV 3 PHASE, VERTICAL STRUCTURE DOUBLE DEADEND TANGENT, W GANG SWITCH

DWN. JLS		DATE: 01/24/2020	
CKD. KW		APPD. KW	
SCALE: N.T.S.			
DATE	REVISION	DATE	REVISION
10/08/2020	A		

DWG. NO.

TSV6.16

THRU HOLE BORING DETAIL		
DIAMETER	FROM SMALL END	FLAT#
0.75"	33'–6"	4
0.75"	33'–11"	4
0.75"	37'–6"	4
0.75"	37'–11"	4
0.75"	41'–6"	4
0.75"	41'–11"	4

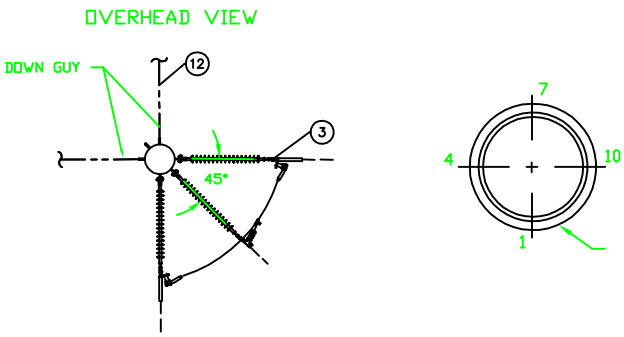

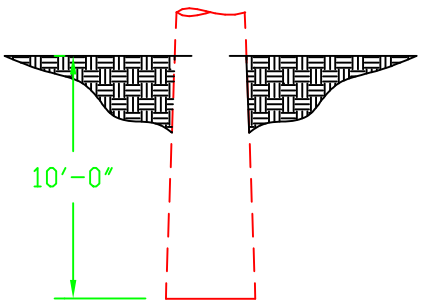

80' Structure Embedment

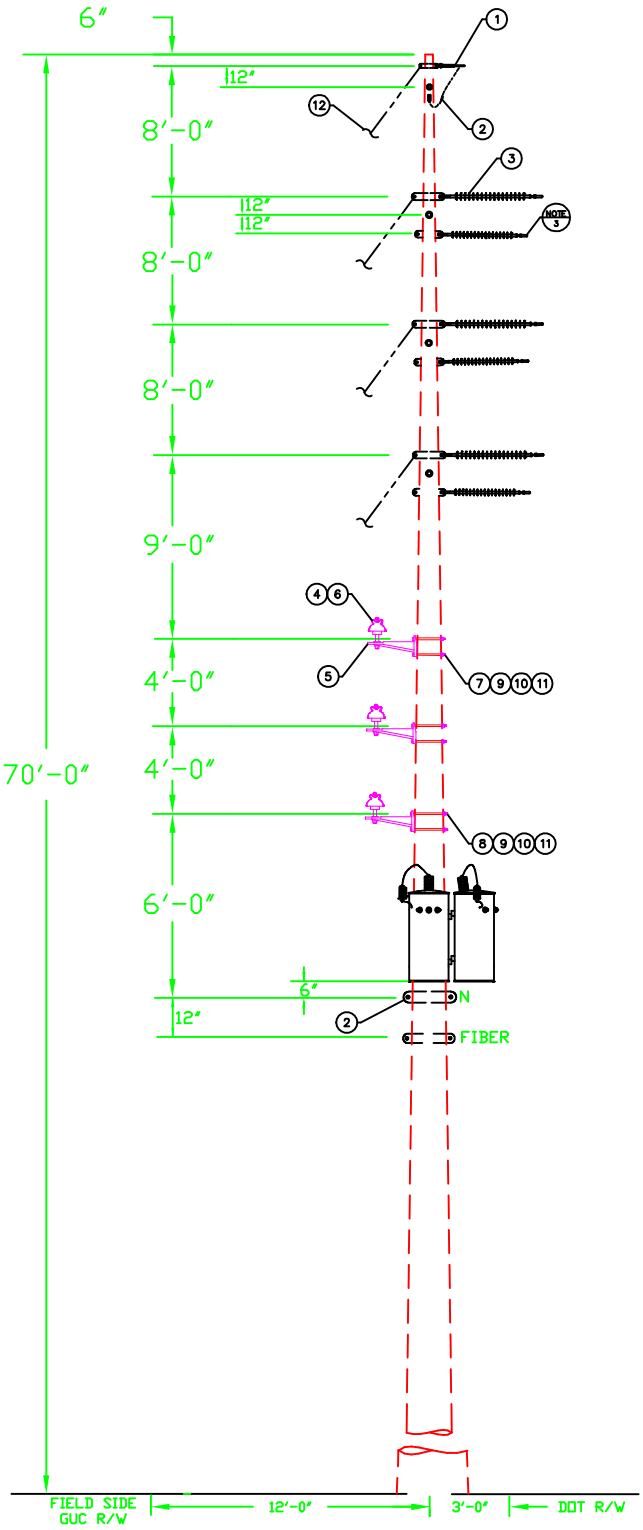

NOTE:

1. DRAWING IS NOT TO SCALE.
2. GUYS OPPOSITE EACH CONDUCTOR DEADEND.
3. SEE OVERHEAD VIEW FOR VANG ANGLE.

DWG. REF.	LIST OF MATERIALS			
	ea.	DESCRIPTION	ITEM	DET.
1	2	OHGW ASSEMBLY, DEADEND	–	TM–4E
2	2	OHGW/NEUTRAL GROUNDING ASSEMBLY	–	TM–2B
3	9	DEADEND ASSEMBLY, PRIMARY	–	TM–1EM
4	3	15 kV PIN INSULATOR	–	
5	3	BRACKETS, MIF	–	
6	3	PIN, SHANK	–	
7	4	BOLT, MACHINE, 5/8" x 18"	–	
8	2	BOLT, MACHINE, 5/8" x 20"	–	
9	6	SPRING LOCK WASHER, 5/8"	–	
10	6	NUT, 5/8"	–	
11	6	WASHER, 2 1/4" SQUARE	–	
12	8	SINGLE DOWN GUY	–	TG–21A
	8	ANCHOR ASSEMBLY, TRANSMISSION	–	TA–2H
	1	DRIVEN GROUND ROD ASSEMBLY	–	TM–9

GREENVILLE UTILITIES COMMISSION
GREENVILLE, NORTH CAROLINA

Greenville Utilities

CIRCUIT 15 STRUCTURE 18
115 KV 3 PHASE, VERTICAL STRUCTURE, LARGE ANGLE DOUBLE DEADEND SUSPENSION, DIST UB

DWN. JLS		DATE: 12/06/2019		DWG. NO.
CKD. KW		APPD. KW		
SCALE: N.T.S.				
DATE	REVISION	DATE	REVISION	TSVD4.V1.8
10/08/2020	A			

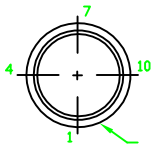

THRU HOLE BORING DETAIL		
DIAMETER	FROM SMALL END	FLAT#
1.00"	1'–0.00"	4
1.00"	2'–0.00"	4
1.00"	7'–0.00"	4
1.00"	8'–0.00"	4
1.00"	13'–0.00"	4
1.00"	14'–0.00"	4

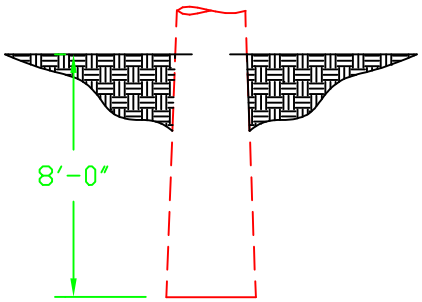

60' STRUCTURE EMBEDMENT

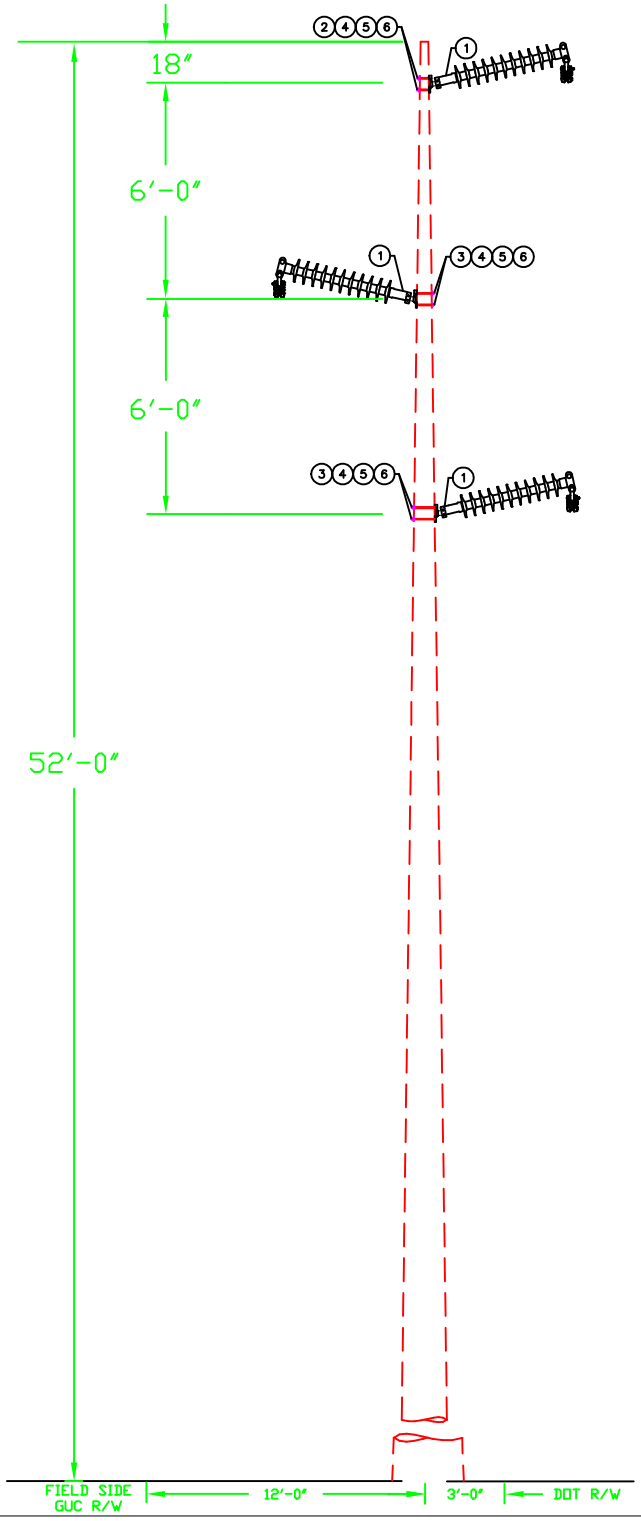

NOTES:

1. DRAWING IS NOT TO SCALE. ALL DIMENSIONS ARE O.C. OF INSULATOR MOUNTS.

DWG. REF.	LIST OF MATERIALS			
	ea.	DESCRIPTION	ITEM	DET.
1	3	115 KV POST INSULATOR, TANGENT	–	TM–3DM
2	2	BOLT, MACHINE, 3/4" x 16"	–	
3	4	BOLT, MACHINE, 3/4" x 18"	–	
4	6	WASHER, SQUARE, 4" x 4" x 1/4" w/ 13/16"	–	
5	6	SPRING LOCK WASHER, 3/4"	–	
6	6	NUT, 3/4"	–	
	1	DRIVEN GROUND ROD ASSEMBLY	–	TM–9

GREENVILLE UTILITIES COMMISSION
GREENVILLE, NORTH CAROLINA

Greenville Utilities

CIRCUIT 15, STRUCTURE 16a & 18a
115 KV 3 PHASE, Z–FRAME STRUCTURE,
TANGENT, POST INSULATORS

DWN. JLS		DATE: 12/05/2019	
CKD. KW		APPD. KW	
SCALE: N.T.S.			
DATE	REVISION	DATE	REVISION
10/08/2020	A		

DWG. NO.

TPZ1.2

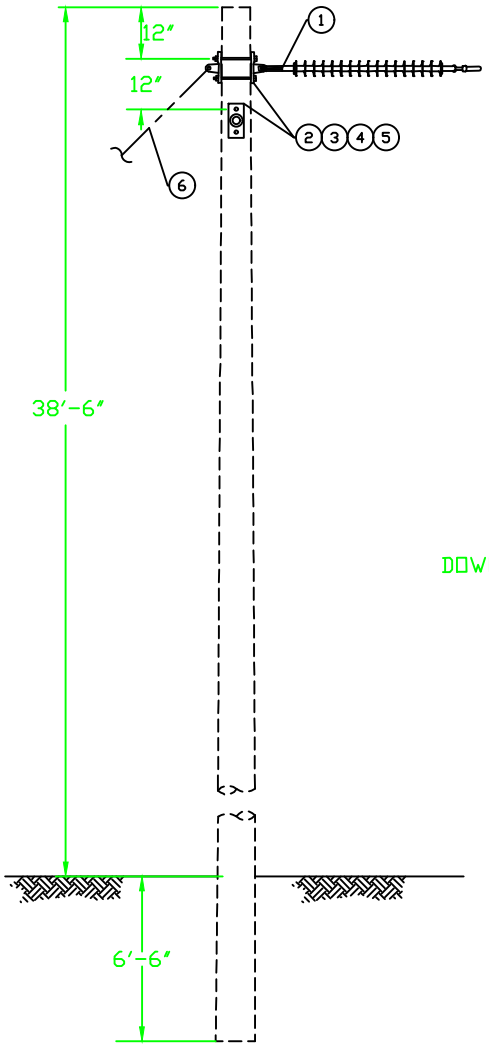

45' STRUCTURE

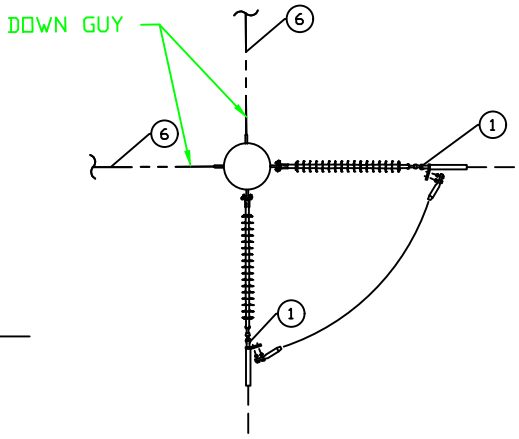

OVERHEAD VIEW

NOTES:

1. DOWN GUYS OPPOSITE OF EACH CONDUCTOR.
2. ANGLE BETWEEN CONDUCTOR ATTACHMENTS WILL BE DETERMINED AND DRILLED IN THE FIELD.
3. DRAWING NOT TO SCALE

DWG. REF.	LIST OF MATERIALS			
	ea.	DESCRIPTION	ITEM	DET.
1	2	DEAD END ASSEMBLY, PRIMARY	–	TM-1EM
2	4	GUY PLATE, TRANSMISSION	–	TG-27D
3	4	BOLT, MACHINE, 3/4" x 14"	–	
4	4	SPRING LOCK WASHER, 3/4"	–	
5	4	NUT, 3/4"	–	
6	2	SINGLE DOWN GUY	–	TG-21A
	1	DRIVEN GROUND ROD ASSEMBLY	–	TM-9
	2	ANCHOR ASSEMBLY, TRANSMISSION	–	TA-2H

GREENVILLE UTILITIES COMMISSION
GREENVILLE, NORTH CAROLINA

Greenville Utilities

CIRCUIT 16, STRUCTURE 1
115 KV 3 PHASE 3 POLE STRUCTURE
LARGE ANGLE, DOUBLE DEADEND

DWN. JLS		DATE: 11/01/19	
CKD. KW		APPD. KW	
SCALE: N.T.S.			
DATE	REVISION	DATE	REVISION

DWG. NO.

TST4

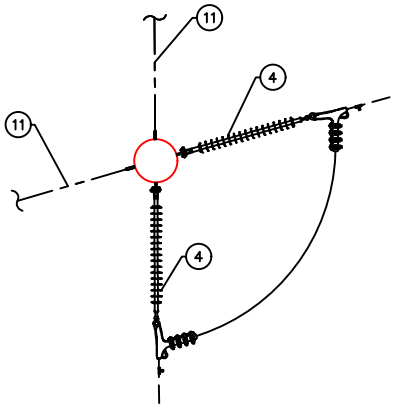

OVERHEAD VIEW

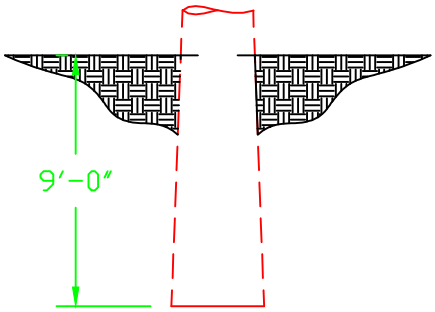

70' Structure Embedment

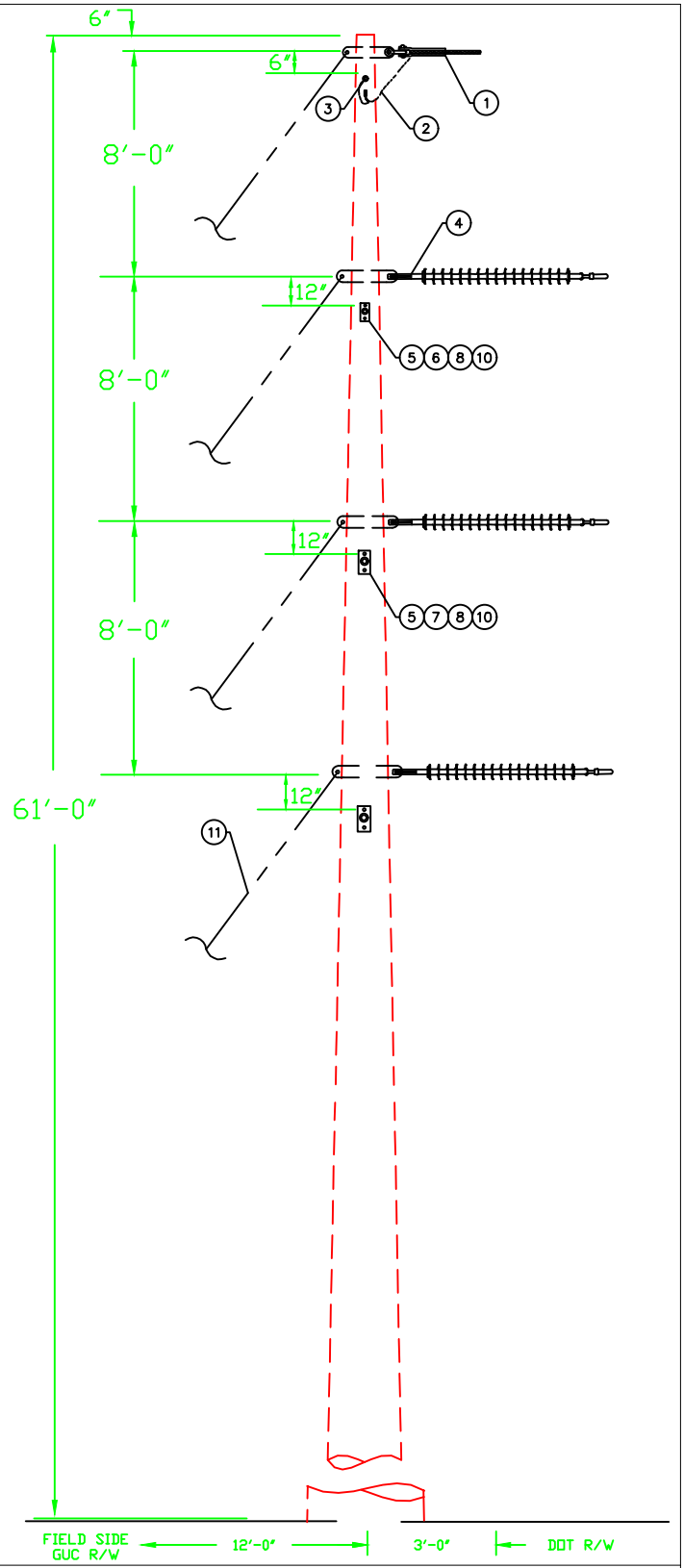

NOTE:

1. ANGLE BETWEEN CONDUCTOR ATTACHMENTS WILL BE DETERMINED AND DRILLED IN THE FIELD.
2. DRAWING IS NOT TO SCALE.

DWG. REF.	LIST OF MATERIALS			
	ea.	DESCRIPTION	ITEM	DET.
1	2	OHGW ASSEMBLY, DEADEND	–	TM–4E
2	1	OHGW GROUNDING ASSEMBLY	–	TM–2B
3	1	SINGLE BOLT OHGW SUPPORT	–	TM–6A(S)
4	6	DEADEND ASSEMBLY, PRIMARY	–	TM–1EM
5	7	GUY PLATE, TRANSMISSION	–	TG–27D
6	3	BOLT, MACHINE 3/4" x 14"	–	
7	4	BOLT, MACHINE 3/4" x 16"	–	
8	6	NUT, 3/4"	–	
9	1	WASHER, SQUARE, 4" x 4" x 1/4" w/ 13/16"	–	
10	7	SPRING LOCK WASHER, 3/4"	–	
11	8	SINGLE DOWN GUY	–	TG–21A
	1	DRIVEN GROUND ROD ASSEMBLY	–	TM–9
	8	ANCHOR ASSEMBLY, TRANSMISSION	–	TA–2H

GREENVILLE UTILITIES COMMISSION
GREENVILLE, NORTH CAROLINA

Greenville Utilities

CIRCUIT 16 STRUCTURE 2
115 KV 3 PHASE, VERTICAL STRUCTURE LARGE ANGLE, DOUBLE DEADEND SUSPENSION

DWN. JLS		DATE: 08/21/20	
CKD. KW		APPD. KW	
SCALE: N.T.S.			
DATE	REVISION	DATE	REVISION

DWG. NO.

TSV4

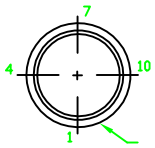

THRU HOLE BORING DETAIL		
DIAMETER	FROM SMALL END	FLAT#
1.00"	8'–0"	4
1.00"	9'–0"	4
1.00"	16'–0"	4
1.00"	17'–0"	4
1.00"	24'–0"	4
1.00"	25'–0"	4

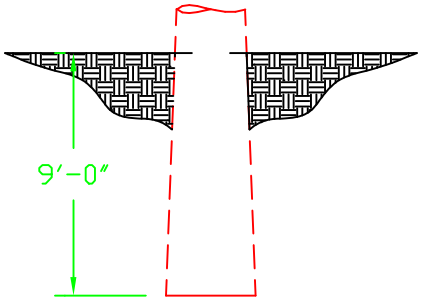

70' STRUCTURE EMBEDMENT

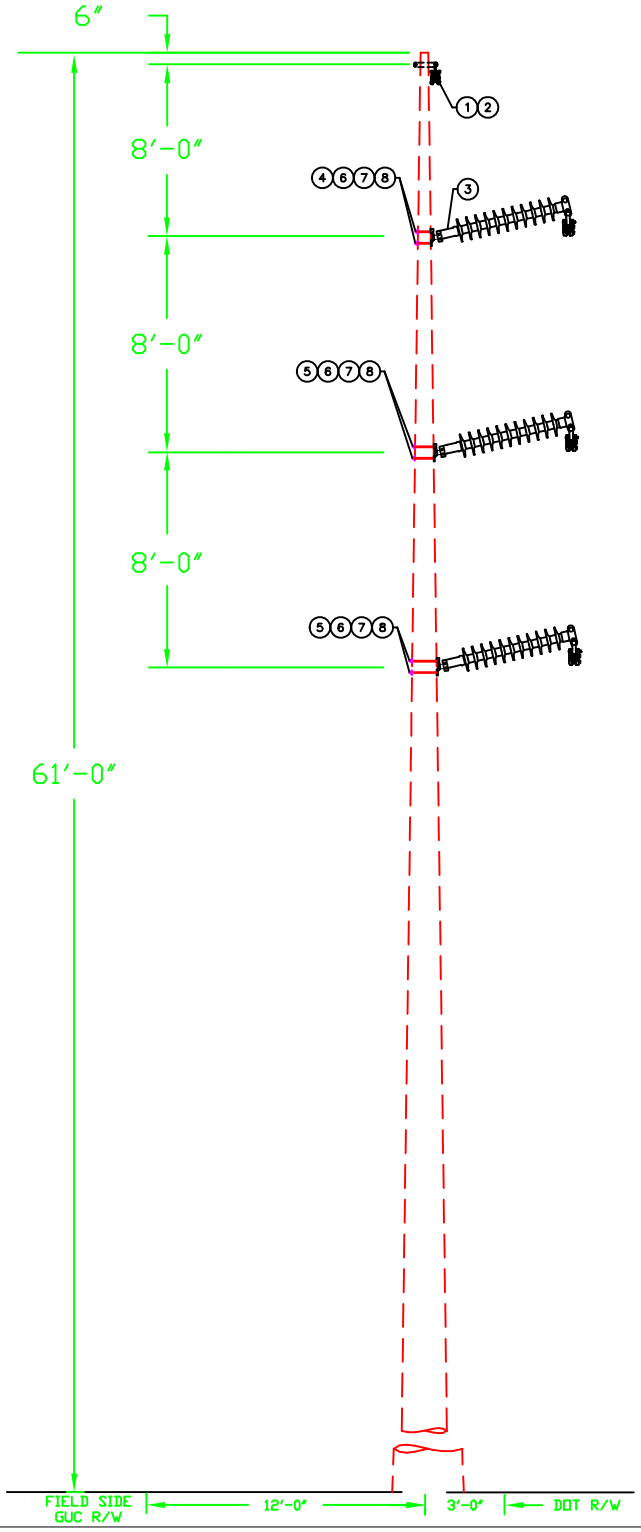

NOTES:

1. DRAWING IS NOT TO SCALE.
2. ALL DIMENSIONS ARE O.C. OF INSULATOR MOUNTS.

DWG. REF.	LIST OF MATERIALS			
	ea.	DESCRIPTION	ITEM	DET.
1	1	OHGW ASSEMBLY, TANGENT	–	TM–4A
2	1	OHGW GROUNDING ASSEMBLY	–	TM–9X(S)
3	3	115 KV POST INSULATOR, TANGENT	–	TM–3DM
4	2	BOLT, MACHINE, 3/4" x 18"	–	
5	4	BOLT, MACHINE, 3/4" x 20"	–	
6	6	WASHER, SQUARE, 4" x 4" x 1/4" w/ 13/16"	–	
7	6	SPRING LOCK WASHER, 3/4"	–	
8	6	NUT, 3/4"	–	

GREENVILLE UTILITIES COMMISSION
GREENVILLE, NORTH CAROLINA

Greenville Utilities

CIRCUIT 16, STRUCTURE 3
115 KV 3 PHASE, VERTICAL STRUCTURE,
TANGENT, POST INSULATORS

DWN. JLS		DATE: 08/21/2020	
CKD. KW		APPD. KW	
SCALE: N.T.S.			
DATE	REVISION	DATE	REVISION
10/08/2020	A		

DWG. NO.

TPV1

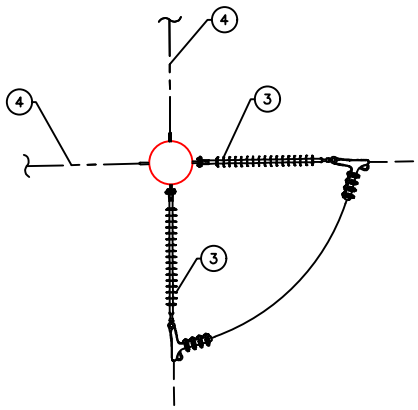

OVERHEAD VIEW

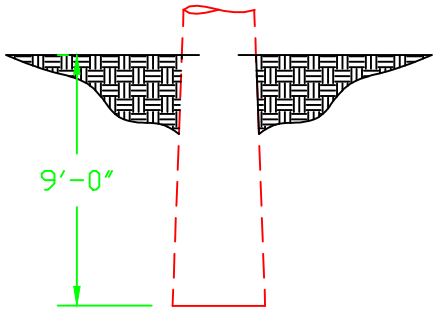

70' Structure Embedment

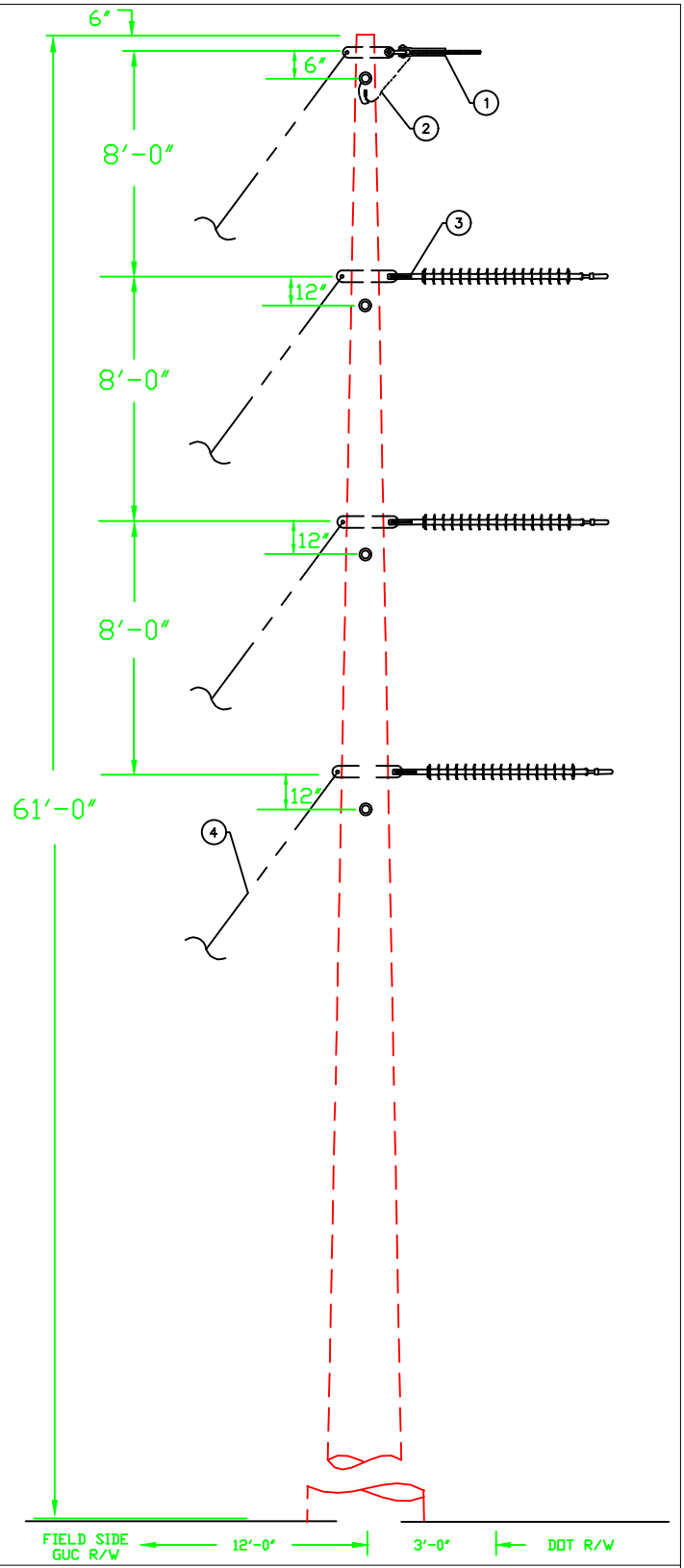

NOTES:

1. DRAWING IS NOT TO SCALE.
2. ALL DIMENSIONS ARE O.C. OF INSULATOR MOUNTS.

DWG. REF.	ea.	LIST OF MATERIALS DESCRIPTION	ITEM	DET.
1	2	OHGW ASSEMBLY, DEADEND	–	TM–4E
2	1	OHGW GROUNDING ASSEMBLY	–	TM–2B
3	6	DEADEND ASSEMBLY, PRIMARY	–	TM–1EM
4	8	SINGLE DOWN GUY	–	TG–21A
	1	DRIVEN GROUND ROD ASSEMBLY	–	TM–9
	8	ANCHOR ASSEMBLY, TRANSMISSION	–	TA–2H

GREENVILLE UTILITIES COMMISSION
GREENVILLE, NORTH CAROLINA

Greenville Utilities

CIRCUIT 16, STRUCTURE 4
115 KV 3 PHASE, VERTICAL STRUCTURE LARGE ANGLE, DOUBLE DEADEND SUSPENSION

DWN. JLS		DATE: 11/8/19	
CKD. KW		APPD. KW	
SCALE: N.T.S.			
DATE	REVISION	DATE	REVISION

DWG. NO.

TSV4

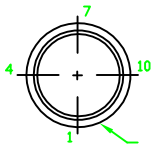

THRU HOLE BORING DETAIL		
DIAMETER	FROM SMALL END	FLAT#
1.00"	8'–0.00"	4
1.00"	9'–0.00"	4
1.00"	14'–0.00"	4
1.00"	15'–0.00"	4
1.00"	20'–0.00"	4
1.00"	21'–0.00"	4

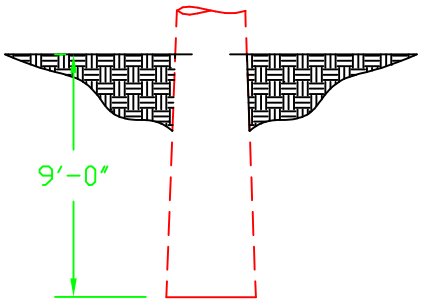

70' STRUCTURE EMBEDMENT

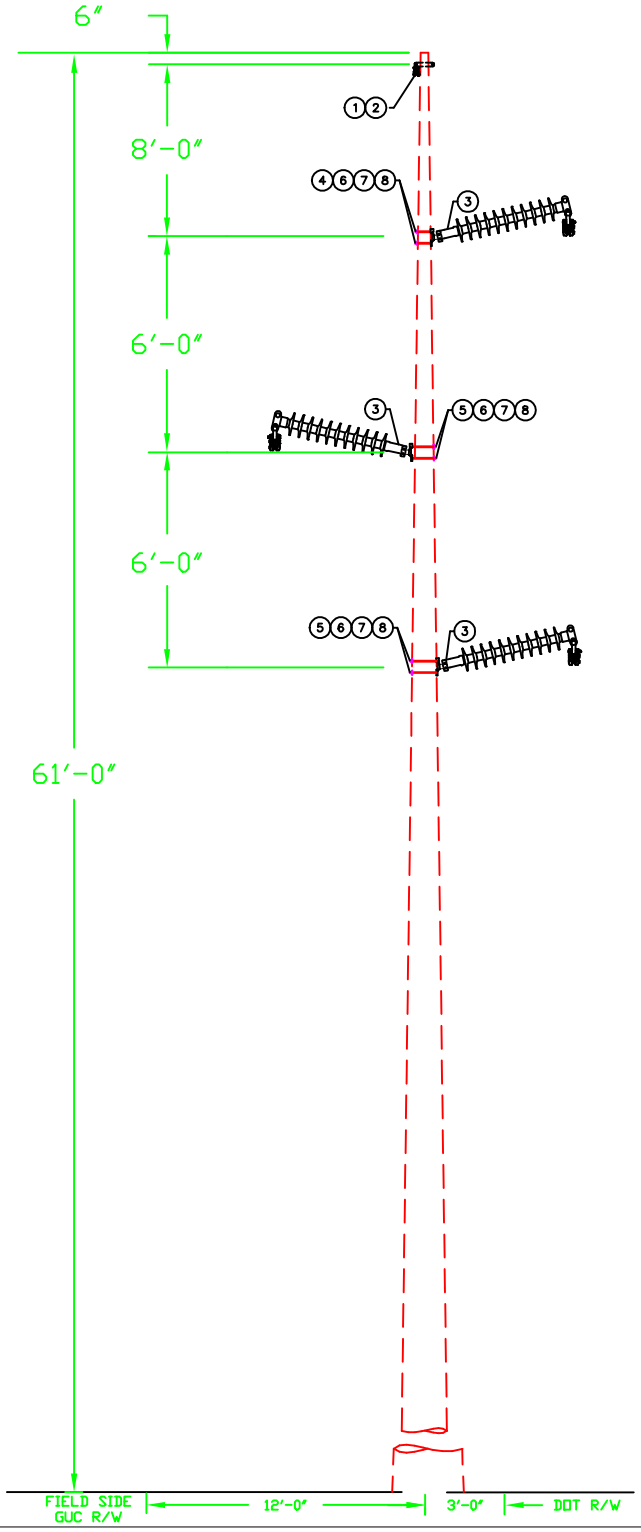

NOTES:

1. DRAWING IS NOT TO SCALE. ALL DIMENSIONS ARE O.C. OF INSULATOR MOUNTS.

DWG. REF.	LIST OF MATERIALS			
	ea.	DESCRIPTION	ITEM	DET.
1	1	OHGW ASSEMBLY, TANGENT	–	TM–4A
2	1	OHGW GROUNDING ASSEMBLY	–	TM–9X(S)
3	3	115 KV POST INSULATOR, TANGENT	–	TM–3DM
4	2	BOLT, MACHINE, 3/4" x 18"	–	
5	4	BOLT, MACHINE, 3/4" x 20"	–	
6	6	WASHER, SQUARE, 4" x 4" x 1/4" w/ 13/16"	–	
7	6	SPRING LOCK WASHER, 3/4"	–	
8	6	NUT, 3/4"	–	
	1	DRIVEN GROUND ROD ASSEMBLY	–	TM–9

GREENVILLE UTILITIES COMMISSION
GREENVILLE, NORTH CAROLINA

Greenville Utilities

CIRCUIT 16, STRUCTURES 5 & 6
115 KV 3 PHASE, Z–FRAME STRUCTURE,
TANGENT, POST INSULATORS

DWN. JLS		DATE: 11/13/2019	
CKD. KW		APPD. KW	
SCALE: N.T.S.			
DATE	REVISION	DATE	REVISION
10/08/2020	A		

DWG. NO.

TPZ1

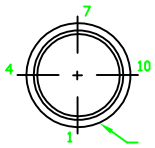

THRU HOLE BORING DETAIL		
DIAMETER	FROM SMALL END	FLAT#
1.00"	8'–0.00"	4
1.00"	9'–0.00"	4
1.00"	14'–0.00"	4
1.00"	15'–0.00"	4
1.00"	20'–0.00"	4
1.00"	21'–0.00"	4

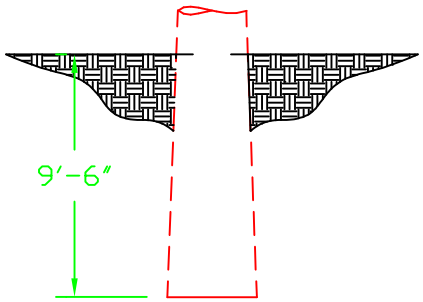

75' STRUCTURE EMBEDMENT

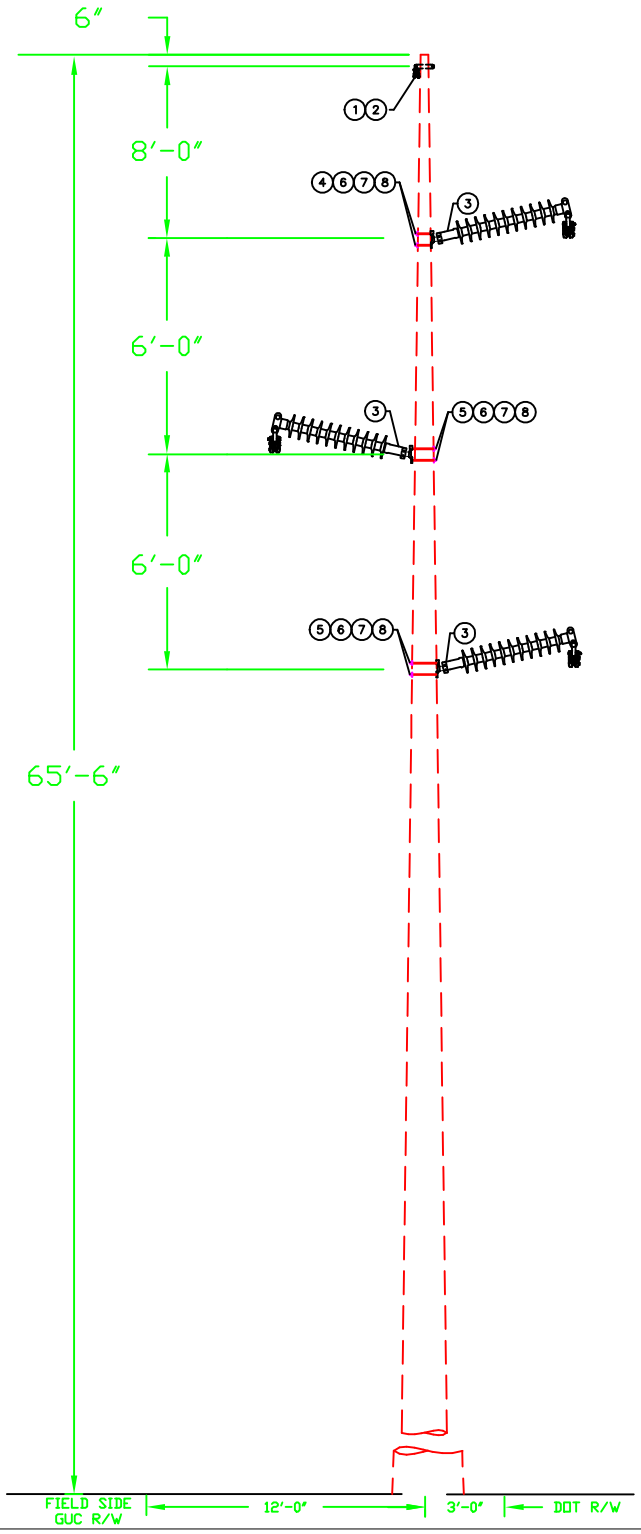

NOTES:

1. DRAWING IS NOT TO SCALE. ALL DIMENSIONS ARE O.C. OF INSULATOR MOUNTS.

DWG. REF.	LIST OF MATERIALS			
	ea.	DESCRIPTION	ITEM	DET.
1	2	OHGW ASSEMBLY, TANGENT	–	TM–4A
2	2	OHGW GROUNDING ASSEMBLY	–	TM–9X(S)
3	3	115 KV POST INSULATOR, TANGENT	–	TM–3DM
4	2	BOLT, MACHINE, 3/4" x 18"	–	
5	4	BOLT, MACHINE, 3/4" x 20"	–	
6	6	WASHER, SQUARE, 4" x 4" x 1/4" w/ 13/16"	–	
7	6	SPRING LOCK WASHER, 3/4"	–	
8	6	NUT, 3/4"	–	
	1	DRIVEN GROUND ROD ASSEMBLY	–	TM–9

GREENVILLE UTILITIES COMMISSION
GREENVILLE, NORTH CAROLINA

Greenville Utilities

CIRCUIT 16, STRUCTURE 7
115 KV 3 PHASE, Z–FRAME STRUCTURE,
TANGENT, POST INSULATORS

DWN. JLS		DATE: 11/13/2019	
CKD. KW		APPD. KW	
SCALE: N.T.S.			
DATE	REVISION	DATE	REVISION
10/08/2020	A		

DWG. NO.

TPZ1

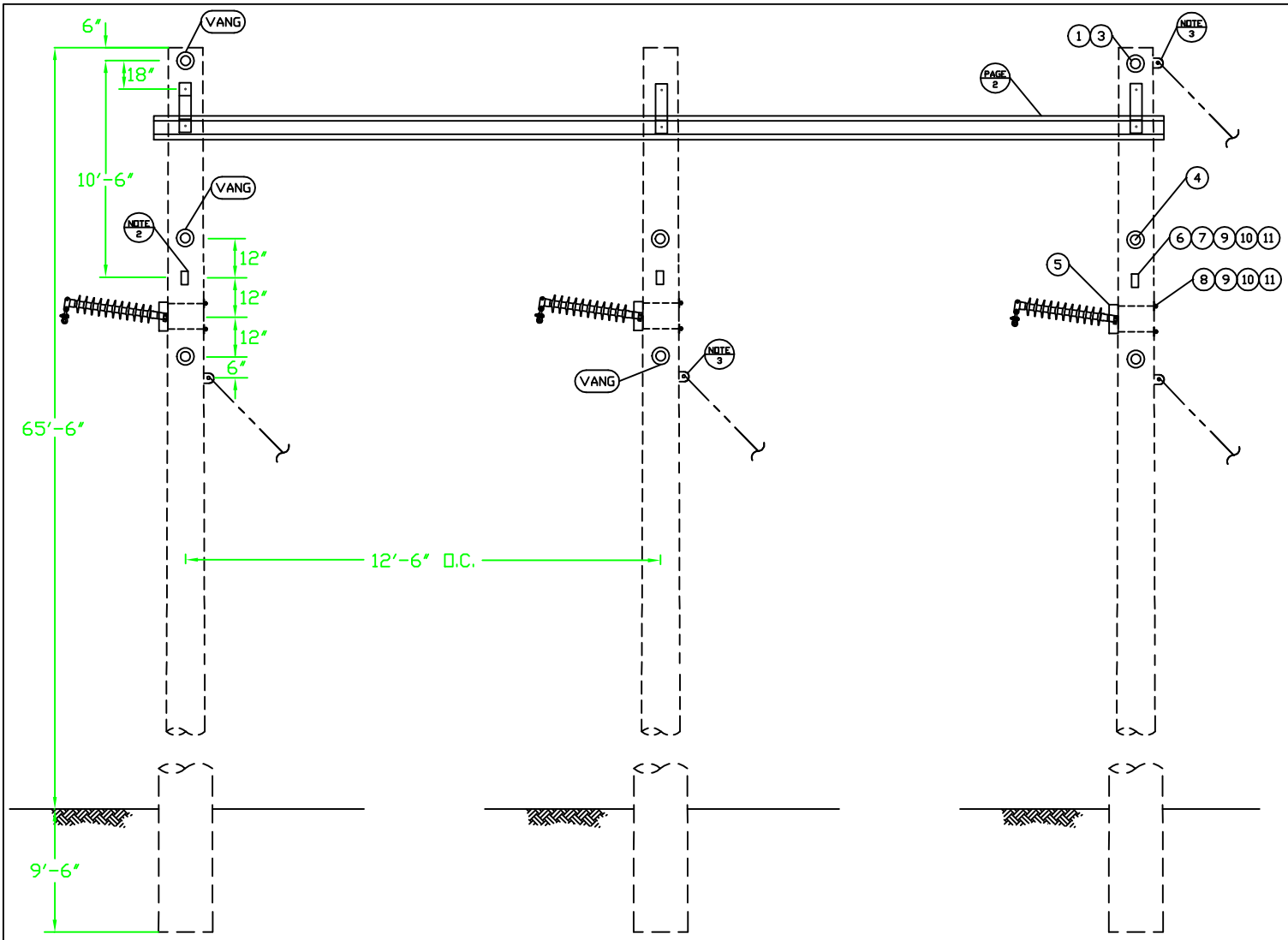

NOTES:

1. DRAWING IS NOT TO SCALE.
2. TRANSMISSION POLE EYE PLATE WILL BE FIELD DRILLED AT APPROPRIATE ANGLE FOR EACH CONDUCTOR AND STATIC.
3. VANGS 10° CCW FROM FLAT 10.

THRU HOLE BORING DETAIL		
DIAMETER	FROM SMALL END	FLAT#
1.25"	2'-0.00"	1
1.25"	3'-3.00"	1
1.00"	11'-6"	10
1.00"	12'-6"	10

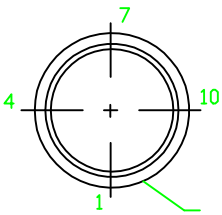

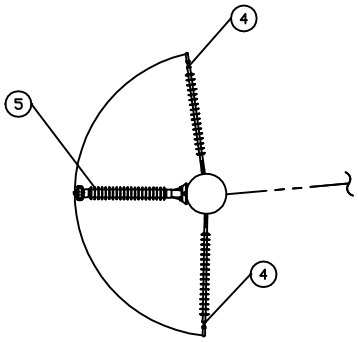

TOP VIEW

DWG. REF.	LIST OF MATERIALS			
	ea.	DESCRIPTION	ITEM	DET.
1	4	OHGW ASSEMBLY, DEADEND	–	TM-4E
2	2	SINGLE BOLT OHGW SUPPORT	–	TM-6A(S)
3	2	OHGW/NEUTRAL GROUNDING ASSEMBLY	–	TM-2B
4	6	DEAD END ASSEMBLY, PRIMARY	–	TM-1EM
5	3	115 KV POST INSULATOR	–	TM-3DM
6	3	GUY PLATE, TRANSMISSION	–	TG-27
7	6	BOLT, MACHINE, 3/4" x 16"	–	
8	6	BOLT, MACHINE, 3/4" x 18"	–	
9	12	SPRING LOCK WASHER, 3/4"	–	
10	12	NUT, 3/4"	–	
11	12	WASHER, SQUARE, 4" x 4" x 1/4" w/ 13/16"	–	
12	4	SINGLE DOWN GUY	–	TG-21A
	3	DRIVEN GROUND ROD ASSEMBLY	–	TM-9
	4	ANCHOR ASSEMBLY, TRANSMISSION	–	TA-2H

GREENVILLE UTILITIES COMMISSION
GREENVILLE, NORTH CAROLINA

Greenville Utilities

CIRCUIT 16 STRUCTURE 8 RIVER CROSSING
115 KV 3 PHASE 3 POLE DOUBLE CIRCUIT STRUCTURE
SMALL ANGLE, DOUBLE DEADEND

DWN. JLS		DATE: 11/22/2019	
CKD. KW		APPD. KW	
SCALE: N.T.S.		PAGE 1 OF 2	
DATE	REVISION	DATE	REVISION
10/08/2020	A		

DWG. NO.

TST6

MANUFACTURER NOTE:

MANUFACTURER IS RESPONSIBLE FOR MOUNTING BOLTS BEING LONG ENOUGH TO FIT POLE CLASSES SPECIFIED.

ALL WELDS UNLESS NOTED. 1/4

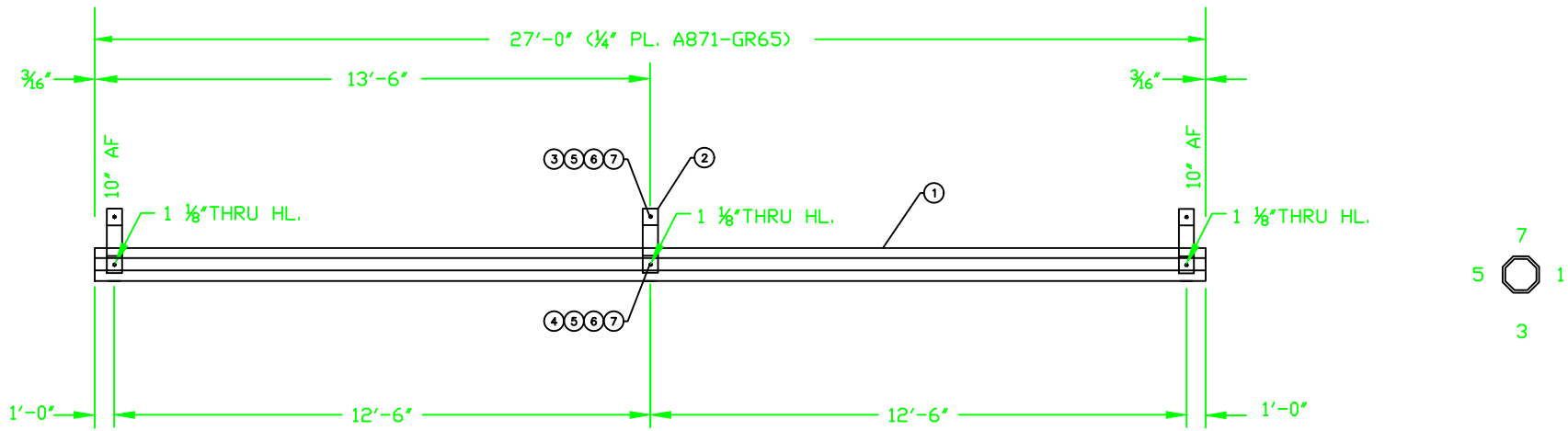

NOTE: DRAWING IS NOT TO SCALE.

DWG. REF.	LIST OF MATERIALS			
	ea.	DESCRIPTION	ITEM	DET.
1	1	27' WEATHERED STEEL CROSS ARM	—	
2	3	GALVANIZED STEEL MOUNTING STRAP	—	
3	3	BOLT, MACHINE 1" x 14"	—	
4	3	BOLT, MACHING 1" x REQ. LENGTH	—	
5	6	SPRING LOCK WASHER, 1"	—	
6	6	NUT, 1"	—	
7	6	WASHER, SQUARE, 4" x 4" x 1/4" w/ 1-1/8"	—	

GREENVILLE UTILITIES COMMISSION
GREENVILLE, NORTH CAROLINA

Greenville Utilities

CIRCUIT 16 STRUCTURE 8 RIVER CROSSING
115 KV 3 PHASE 3 POLE DOUBLE CIRCUIT STRUCTURE
SMALL ANGLE, DOUBLE DEADEND

DWN. JLS		DATE: 11/22/19	
CKD. KW		APPD. KW	
SCALE: N.T.S.		PAGE 2 OF 2	
DATE	REVISION	DATE	REVISION

DWG. NO.

TST6

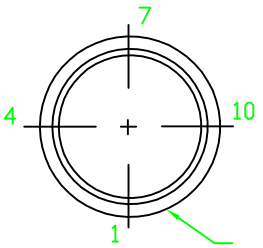

THRU HOLE BORING DETAIL		
DIAMETER	FROM SMALL END	FLAT#
1.00"	10'-0"	1
1.00"	11'-0"	1
1.00"	18'-0"	1
1.00"	19'-0"	1
1.00"	26'-0"	1
1.00"	27'-0"	1

OVERHEAD VIEW

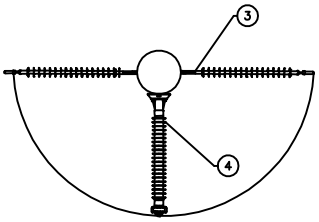

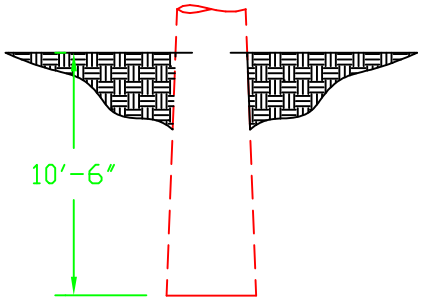

85' Structure Embedment

NOTE: DRAWING IS NOT TO SCALE. ALL DIMENSIONS ARE O.C. OF INSULATOR MOUNTS.

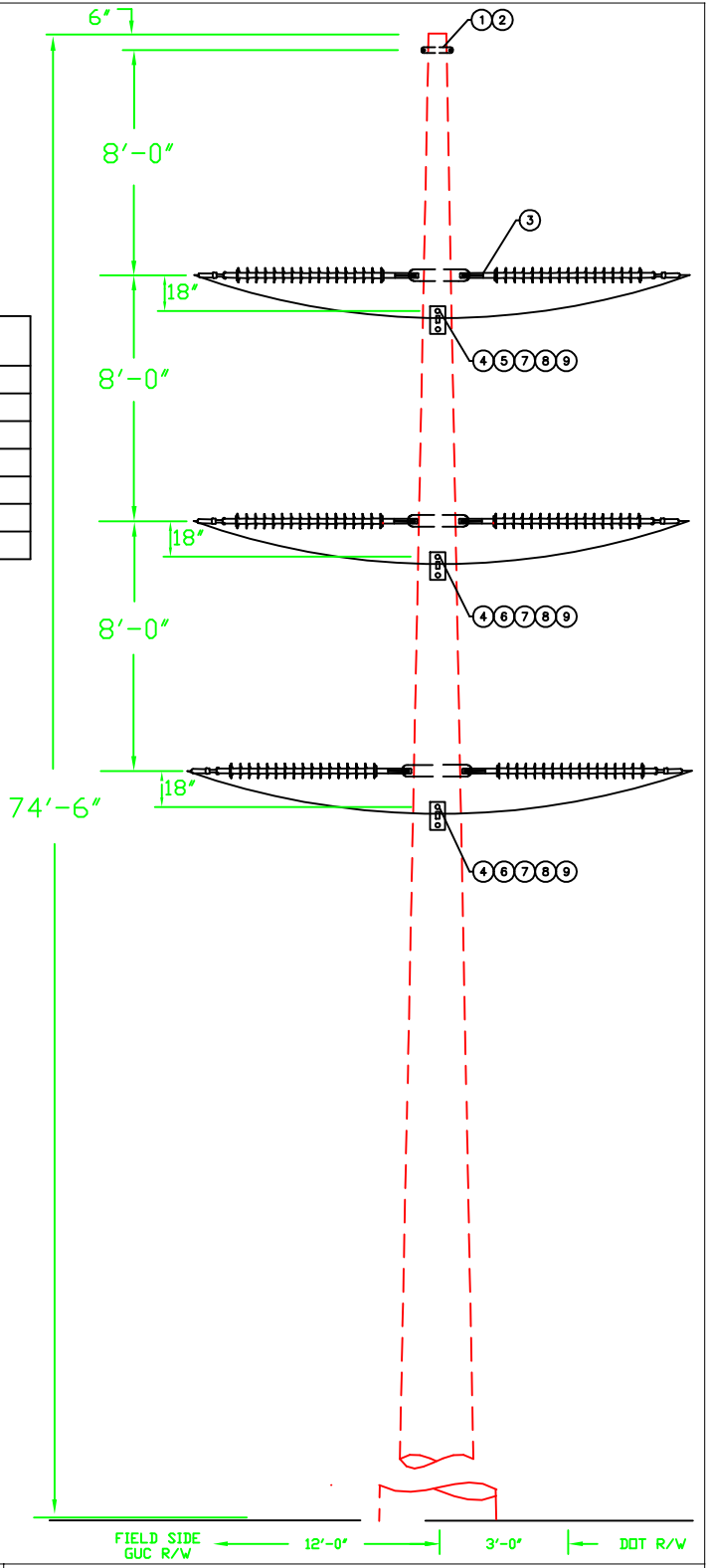

DWG. REF.	ea.	LIST OF MATERIALS DESCRIPTION	ITEM	DET.
1	3	OHGW ASSEMBLY, DEADEND	–	TM-4E
2	1	OHGW GROUNDING ASSEMBLY	–	TM-2C
3	6	DEADEND ASSEMBLY, PRIMARY	–	TM-1EM
4	3	115 KV POST INSULATOR TANGENT	–	TM-3DM
5	2	BOLT, MACHINE, 3/4" x 20"	–	
6	4	BOLT, MACHINE, 3/4" x 22"	–	
7	6	SPRING LOCK WASHER, 3/4"	–	
8	6	NUT, 3/4"	–	
9	6	WASHER SQUARE, 4"x4"x1/4", w/13/16"	–	
	1	DRIVEN GROUND ROD ASSEMBLY	–	TM-9

GREENVILLE UTILITIES COMMISSION
GREENVILLE, NORTH CAROLINA

Greenville Utilities

CIRCUIT 16 STRUCTURE 9
115 KV 3 PHASE, VERTICAL STRUCTURE
TANGENT DOUBLE DEADEND, SUSPENSION

DWN. JLS		DATE: 11/22/2019	
CKD. KW		APPD. KW	
SCALE: N.T.S.			
DATE	REVISION	DATE	REVISION
10/08/2020	A		

DWG. NO.

TSV6

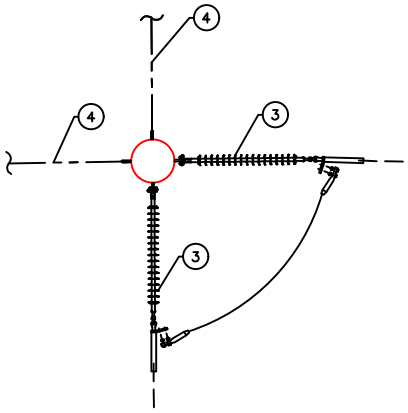

OVERHEAD VIEW

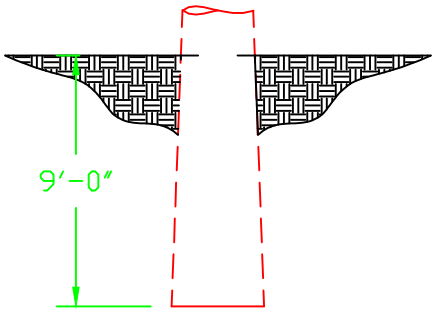

70' Structure Embedment

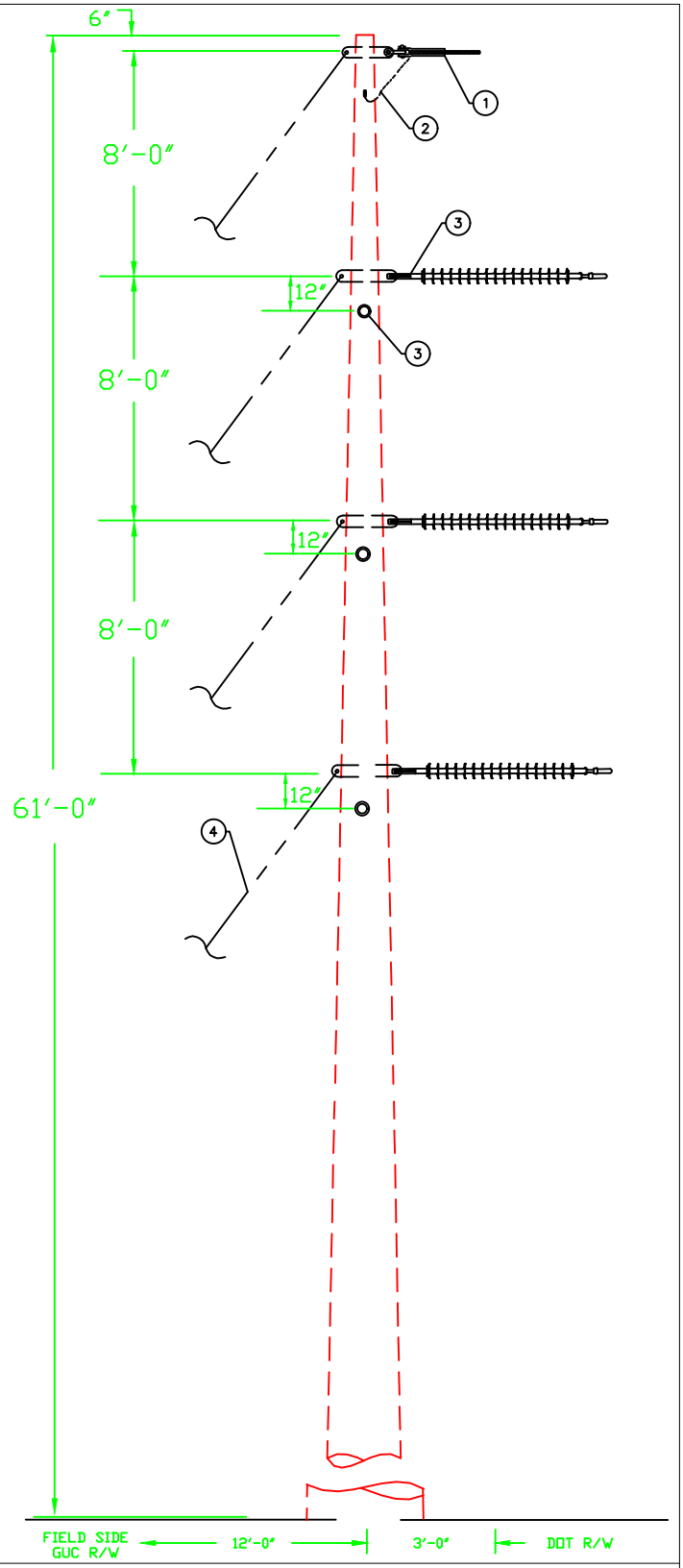

NOTE:

1. DRAWING IS NOT TO SCALE.

DWG. REF.	ea.	LIST OF MATERIALS DESCRIPTION	ITEM	DET.
1	1	OHGW ASSEMBLY, DEADEND	–	TM–4E
2	1	OHGW GROUNDING ASSEMBLY	–	TM–2A
3	6	DEADEND ASSEMBLY, PRIMARY	–	TM–1EM
4	7	SINGLE DOWN GUY	–	TG–21A
	1	DRIVEN GROUND ROD ASSEMBLY	–	TM–9
	7	ANCHOR ASSEMBLY, TRANSMISSION	–	TA–2H

GREENVILLE UTILITIES COMMISSION
GREENVILLE, NORTH CAROLINA

Greenville Utilities

CIRCUIT 17 STRUCTURE 1
115 KV 3 PHASE, VERTICAL STRUCTURE LARGE ANGLE, DOUBLE DEADEND SUSPENSION

DWN. JLS		DATE: 11/13/2019	
CKD. KW		APPD. KW	
SCALE: N.T.S.			
DATE	REVISION	DATE	REVISION

DWG. NO.

TSV4

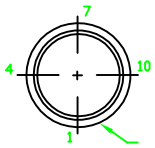

THRU HOLE BORING DETAIL		
DIAMETER	FROM SMALL END	FLAT#
1.00"	8'–0.00"	4
1.00"	9'–0.00"	4
1.00"	14'–0.00"	4
1.00"	15'–0.00"	4
1.00"	20'–0.00"	4
1.00"	21'–0.00"	4

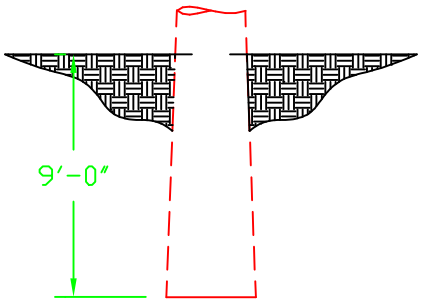

70' STRUCTURE EMBEDMENT

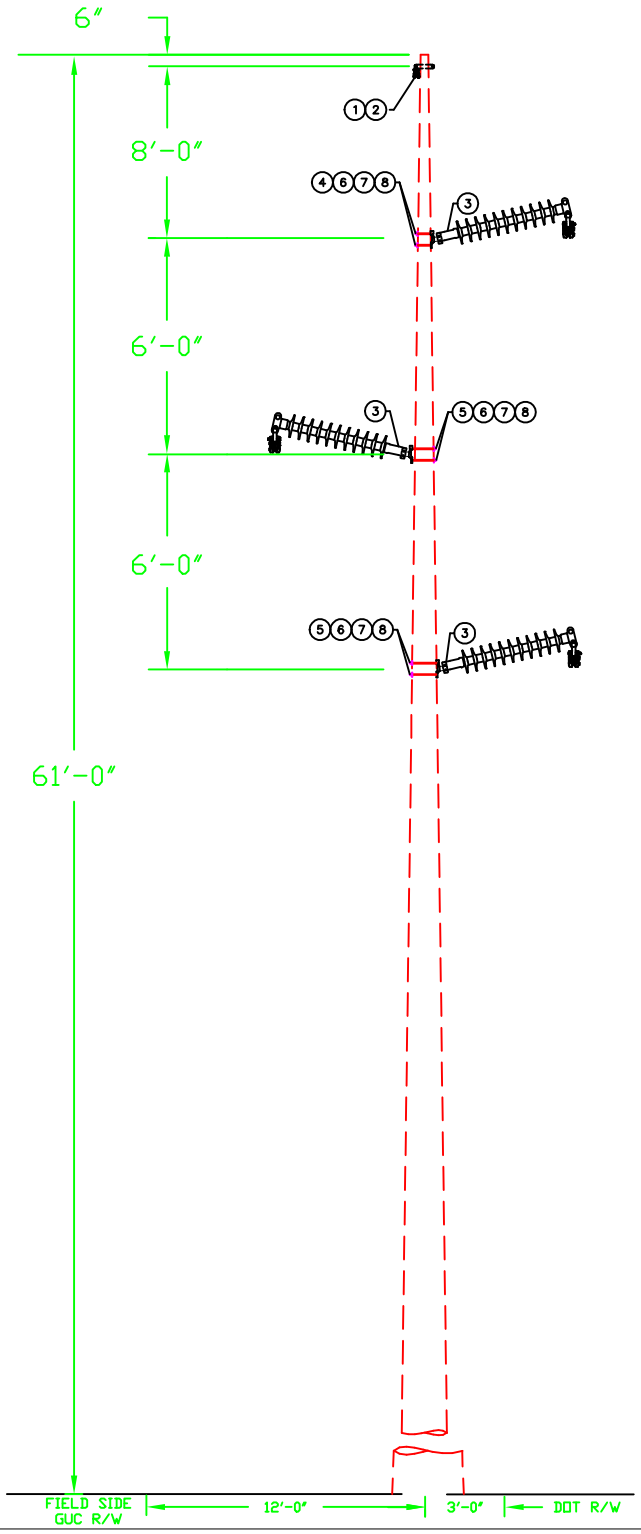

NOTES:

1. DRAWING IS NOT TO SCALE. ALL DIMENSIONS ARE O.C. OF INSULATOR MOUNTS.

DWG. REF.	LIST OF MATERIALS			
	ea.	DESCRIPTION	ITEM	DET.
1	1	OHGW ASSEMBLY, TANGENT	–	TM–4A
2	1	OHGW GROUNDING ASSEMBLY	–	TM–9X(S)
3	3	115 KV POST INSULATOR, TANGENT	–	TM–3DM
4	2	BOLT, MACHINE, 3/4" x 18"	–	
5	4	BOLT, MACHINE, 3/4" x 20"	–	
6	6	WASHER, SQUARE, 4" x 4" x 1/4" w/ 13/16"	–	
7	6	SPRING LOCK WASHER, 3/4"	–	
8	6	NUT, 3/4"	–	
	1	DRIVEN GROUND ROD ASSEMBLY	–	TM–9

GREENVILLE UTILITIES COMMISSION
GREENVILLE, NORTH CAROLINA

Greenville Utilities

CIRCUIT 17, STRUCTURE 2
115 KV 3 PHASE, Z–FRAME STRUCTURE,
TANGENT, POST INSULATORS

DWN. JLS		DATE: 11/14/2019	
CKD. KW		APPD. KW	
SCALE: N.T.S.			
DATE	REVISION	DATE	REVISION
10/08/2020	A		

DWG. NO.

TPZ1

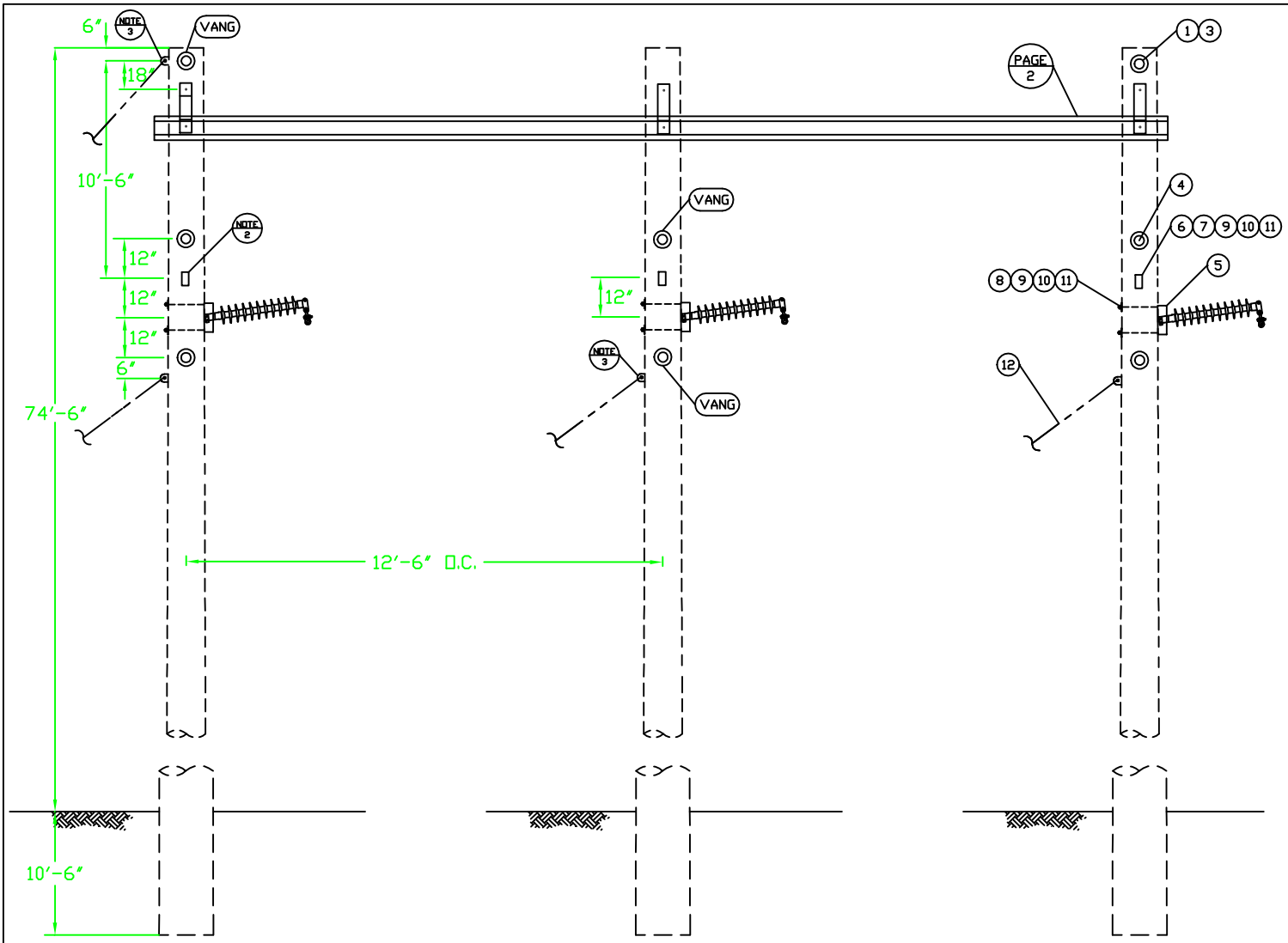

NOTES:

1. DRAWING IS NOT TO SCALE.
2. TRANSMISSION POLE EYE PLATE WILL BE FIELD DRILLED AT APPROPRIATE ANGLE FOR EACH CONDUCTOR AND STATIC.
3. VANGS 10° CW FROM FLAT 4.

THRU HOLE BORING DETAIL		
DIAMETER	FROM SMALL END	FLAT#
1.25"	2'-0.00"	1
1.25"	3'-3.00"	1
1.00"	11'-6"	10
1.00"	12'-6"	10

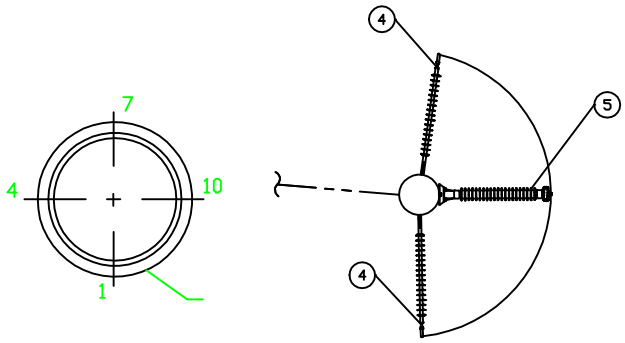

TOP VIEW

DWG. REF.	LIST OF MATERIALS			
	ea.	DESCRIPTION	ITEM	DET.
1	4	OHGW ASSEMBLY, DEADEND	–	TM-4E
2	2	SINGLE BOLT OHGW SUPPORT	–	TM-6A(S)
3	2	OHGW/NEUTRAL GROUNDING ASSEMBLY	–	TM-2B
4	6	DEAD END ASSEMBLY, PRIMARY	–	TM-1EM
5	3	115 KV POST INSULATOR	–	TM-3DM
6	3	GUY PLATE, TRANSMISSION	–	TG-27
7	6	BOLT, MACHINE, 3/4" x 16"	–	
8	6	BOLT, MACHINE, 3/4" x 18"	–	
9	12	SPRING LOCK WASHER, 3/4"	–	
10	12	NUT, 3/4"	–	
11	12	WASHER, SQUARE, 4" x 4" x 1/4" w/ 13/16"	–	
12	4	SINGLE DOWN GUY	–	TG-21A
	3	DRIVEN GROUND ROD ASSEMBLY	–	TM-9
	4	ANCHOR ASSEMBLY, TRANSMISSION	–	TA-2H

GREENVILLE UTILITIES COMMISSION
GREENVILLE, NORTH CAROLINA

Greenville Utilities

CIRCUIT 17 STRUCTURE 3 RIVER CROSSING
115 KV 3 PHASE 3 POLE DOUBLE CIRCUIT STRUCTURE
SMALL ANGLE, DOUBLE DEADEND

DWN. JLS		DATE: 11/20/2019	
CKD. KW		APPD. KW	
SCALE: N.T.S.		PAGE 1 OF 2	
DATE	REVISION	DATE	REVISION
10/08/2020	A		

DWG. NO.

TST6

MANUFACTURER NOTE:

MANUFACTURER IS RESPONSIBLE FOR MOUNTING BOLTS BEING LONG ENOUGH TO FIT POLE CLASSES SPECIFIED.

ALL WELDS UNLESS NOTED. 1/4

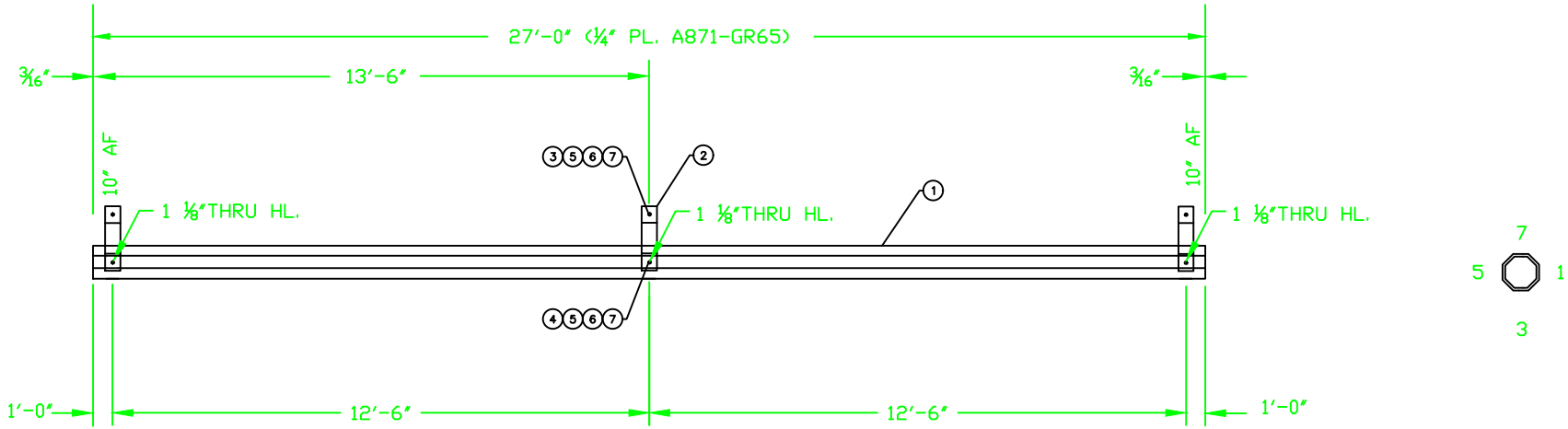

NOTE: DRAWING IS NOT TO SCALE.

DWG. REF.	LIST OF MATERIALS			
	ea.	DESCRIPTION	ITEM	DET.
1	1	27' WEATHERED STEEL CROSS ARM	—	
2	3	GALVANIZED STEEL MOUNTING STRAP	—	
3	3	BOLT, MACHINE 1" x 14"	—	
4	3	BOLT, MACHING 1" x REQ. LENGTH	—	
5	6	SPRING LOCK WASHER, 1"	—	
6	6	NUT, 1"	—	
7	6	WASHER, SQUARE, 4" x 4" x 1/4" w/ 1-1/8"	—	

GREENVILLE UTILITIES COMMISSION
GREENVILLE, NORTH CAROLINA

Greenville Utilities

CIRCUIT 17 STRUCTURE 3 RIVER CROSSING
115 KV 3 PHASE 3 POLE DOUBLE CIRCUIT STRUCTURE
SMALL ANGLE, DOUBLE DEADEND

DWN. JLS		DATE: 11/20/19	
CKD. KW		APPD. KW	
SCALE: N.T.S.		PAGE 2 OF 2	
DATE	REVISION	DATE	REVISION

DWG. NO.

TST6

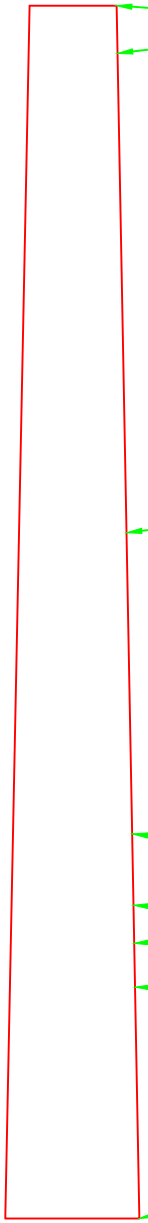

LOCATION DIMENSION			
FROM LARGE END	FROM SMALL END	TOLERANCES BLANK-M-1	DETAIL
	0'-0.00"		7
	1'-6.00"		4
33'-0.00"			4
15'-6.00"			5
13'-6.00"			4
12'-6.00"			3
10'-6.00"			2
10'-6.00"			GL
0'-00"			1

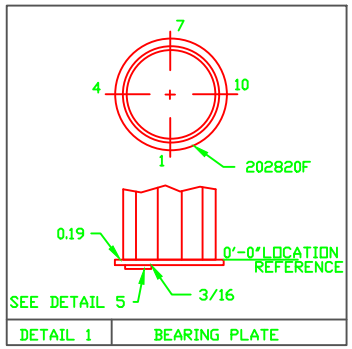

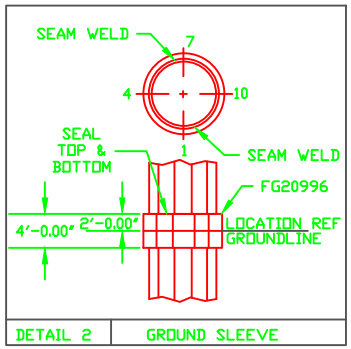

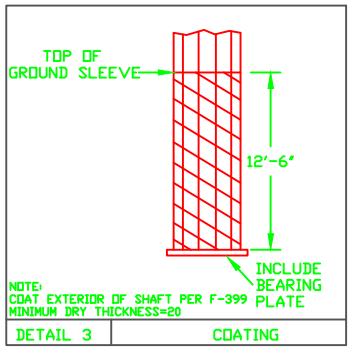

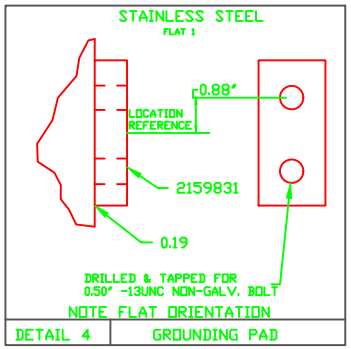

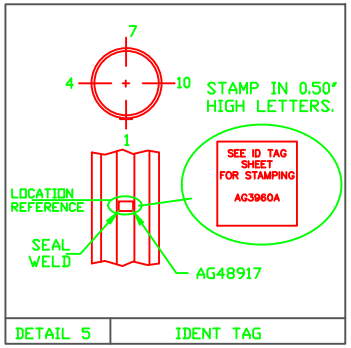

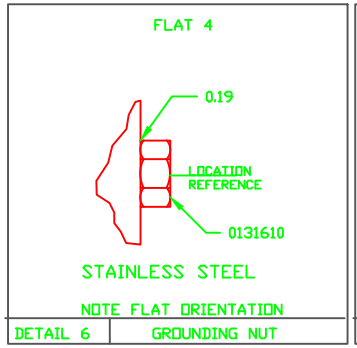

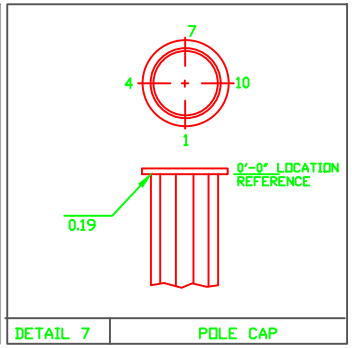

THRU HOLE BORING DETAIL		
DIAMETER	FROM SMALL END	FLAT#
.75"	0'-5.00"	4
.75"	0'-9.00"	4
1.25"	5'-3.00"	1
1.25"	6'-6.00"	1

NOTES:

1. OHGW HOLES WILL BE FIELD DRILLED.
2. DRAWING IS NOT TO SCALE

NOTES:

1. FLATS 1 AND 12 ARE ADJACENT TO SEAM WELD
2. ALL CROSS SECTION VIEWS ARE FROM SMALL END OF TUBE.
3. POLE TUBE DATA REF MATERIAL=S-99

TUBE LENGTH	END OD (IN) LARGE	END OD (IN) SMALL	THICKNESS (IN)
85'			

TUBE DIAMETERS MEASURED ACROSS FLATS

GREENVILLE UTILITIES COMMISSION
GREENVILLE, NORTH CAROLINA

Greenville Utilities

CIRCUIT 17, STRUCTURE 4 & 5
115 KV 3 PHASE, H-FRAME STRUCTURE,
TANGENT DOUBLE DEADEND

DWN. JLS		DATE: 11/19/19	
CKD. KW		APPD. KW	
SCALE: N.T.S.		PAGE: 1 OF 4	
DATE	REVISION	DATE	REVISION

DWG. NO.

TSH6

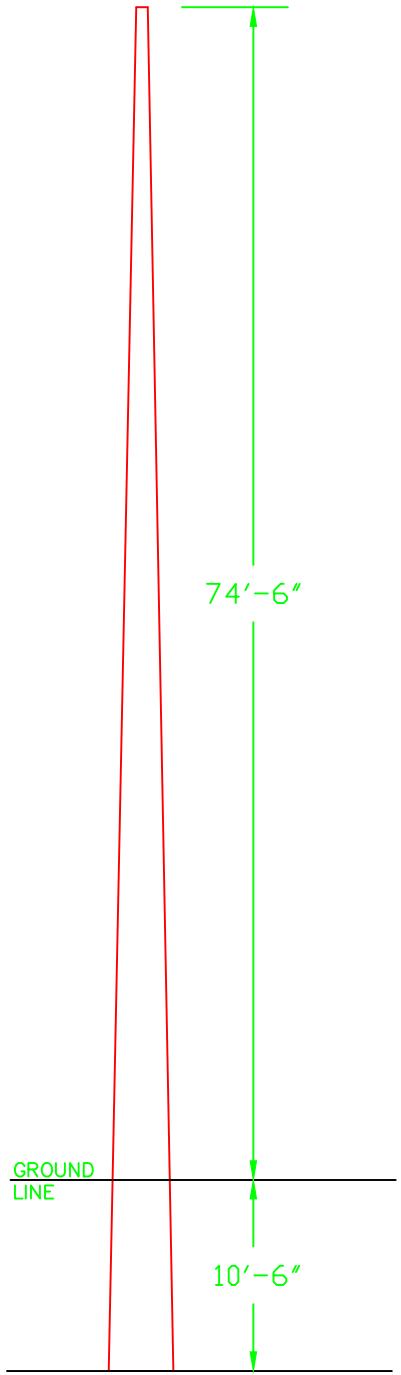

ELEVATION VIEW
SEE FABRICATION DRAWINGS
FOR ADDITIONAL DETAIL

NOTE: DIMENSIONS IN THE DRAWING
ARE NOT TRUE TO PROPORTION.

85' GALVANIZED STEEL POLE

DWG. REF.	LIST OF MATERIALS			
	ea.	DESCRIPTION	ITEM	DET.
	2	DOUBLE BOLT OHGW SUPPORT	–	TM–6B(S)
	2	OHGW ASSEMBLY, TANGENT	–	TM–4A
	2	OHGW GROUNDING ASSEMBLY	–	TM–9X(S)
	6	DEADEND ASSEMBLY, PRIMARY	–	TM–1EM
	2	DRIVEN GROUND ROD ASSEMBLY	–	TM–9

GREENVILLE UTILITIES COMMISSION
GREENVILLE, NORTH CAROLINA

Greenville Utilities

CIRCUIT 17, STRUCTURE 4 & 5
115 KV 3 PHASE, H–FRAME STRUCTURE,
TANGENT DOUBLE DEADEND

DWN. JLS		DATE: 11/19/19	
CKD. KW		APPD. KW	
SCALE: N.T.S.		PAGE: 2 OF 4	
DATE	REVISION	DATE	REVISION

DWG. NO.

TSH6

AG3967Z

NOTES:
1. MANUFACTURER IS RESPONSIBLE FOR MOUNTING BOLTS BEING LONG ENOUGH TO FIT POLE CLASSES SPECIFIED.
2. DRAWING IS NOT TO SCALE.
3. STRUCTURE 4 WILL HAVE OHGW DOUBLE DEADEND. MANUFACTURER'S BORES SHOULD BE PLUGGED AND NEW HOLES WILL NEED TO BE FIELD DRILLED ON FACE 1 FOR DOUBLE POLE EYE PLATES. SEE SEPARATE MATERIALS LIST FOR STRUCTURE 4.

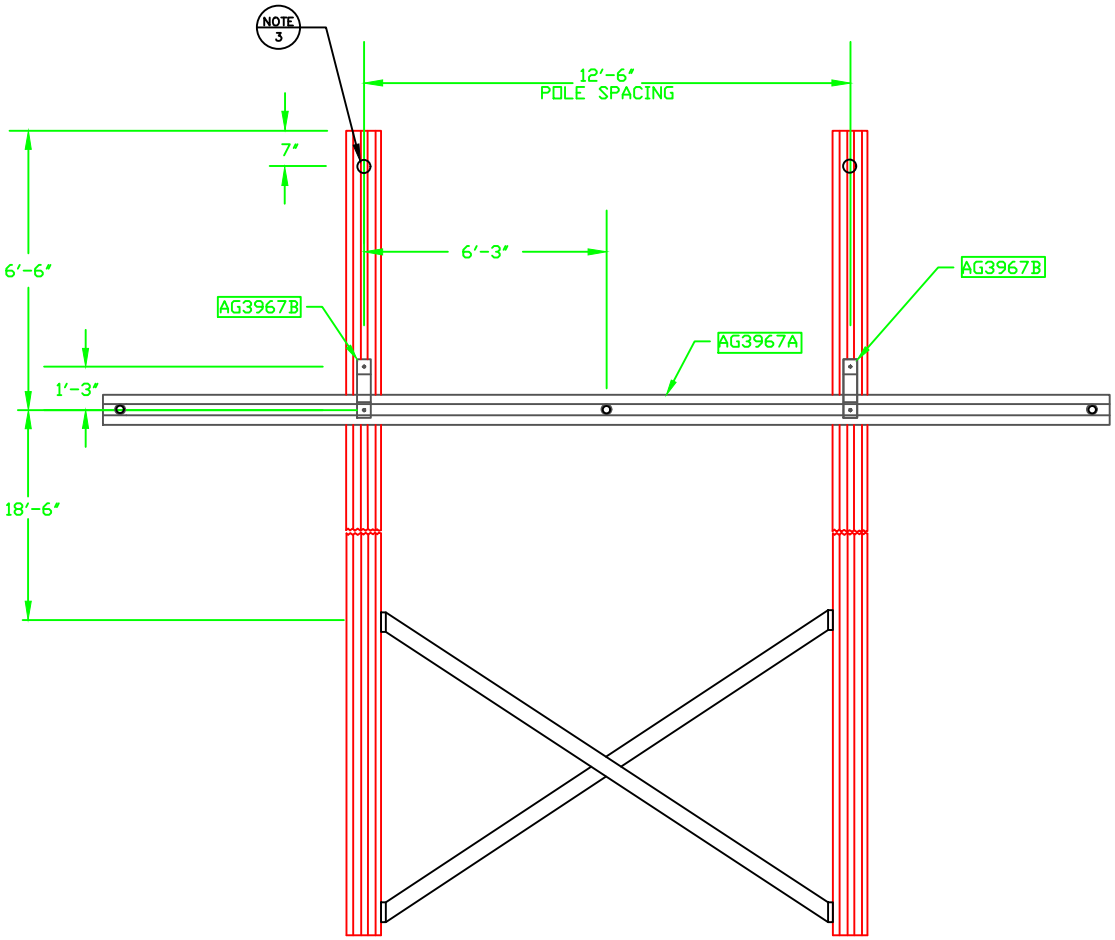

TOTAL HARDWARE QUANTITIES TO INCLUDE AN EXTRA 5% OVERAGE

BILL OF MATERIAL
(SHIPPING SEQ. = 1 FOR ALL)

PART #	DESCRIPTION	UNIT WEIGHT	QTY PER STR.
AG3967A	CROSSARM	790	1
	GALVANIZED STEEL MOUNTING STRAP	20	2
AG99267	HARDWARE KIT		1

DESCRIPTION

LINE	PART NUMBER	HARDWARE SIZE				GEN.	FINISH	ASTM SPEC.	QTY PER STR.
		BOLT		NUT	WASHER				
		DIA.	LENGTH						
1		1				TYPE3	BARE	A325	2
2		1				TYPE3	BARE	A325	2
3				1		ANCO	BARE	A563	8
4					1	FLT	BARE	F436	16
5									
6									

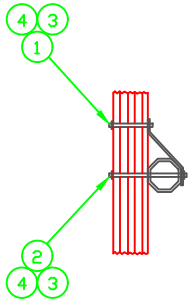

115 kV H-FRAME 26' CROSSARM

GREENVILLE UTILITIES COMMISSION
GREENVILLE, NORTH CAROLINA

Greenville Utilities

CIRCUIT 17, STRUCTURE 4 & 5
115 KV 3 PHASE, H-FRAME STRUCTURE,
TANGENT DOUBLE DEADEND

DWN. JLS		DATE: 11/19/19	
CKD. KW		APPD. KW	
SCALE: N.T.S.		PAGE: 3 OF 4	
DATE	REVISION	DATE	REVISION

DWG. NO.
TSH6

AG3967A

BILL OF MATERIAL	
PART NUMBER	QTY.
FG21005	1
AG99328	3
AG99266	2

MANUFACTURER NOTE:

MANUFACTURER IS RESPONSIBLE FOR MOUNTING BOLTS BEING LONG ENOUGH TO FIT POLE CLASSES SPECIFIED.

ALL WELDS UNLESS NOTED. 1/4

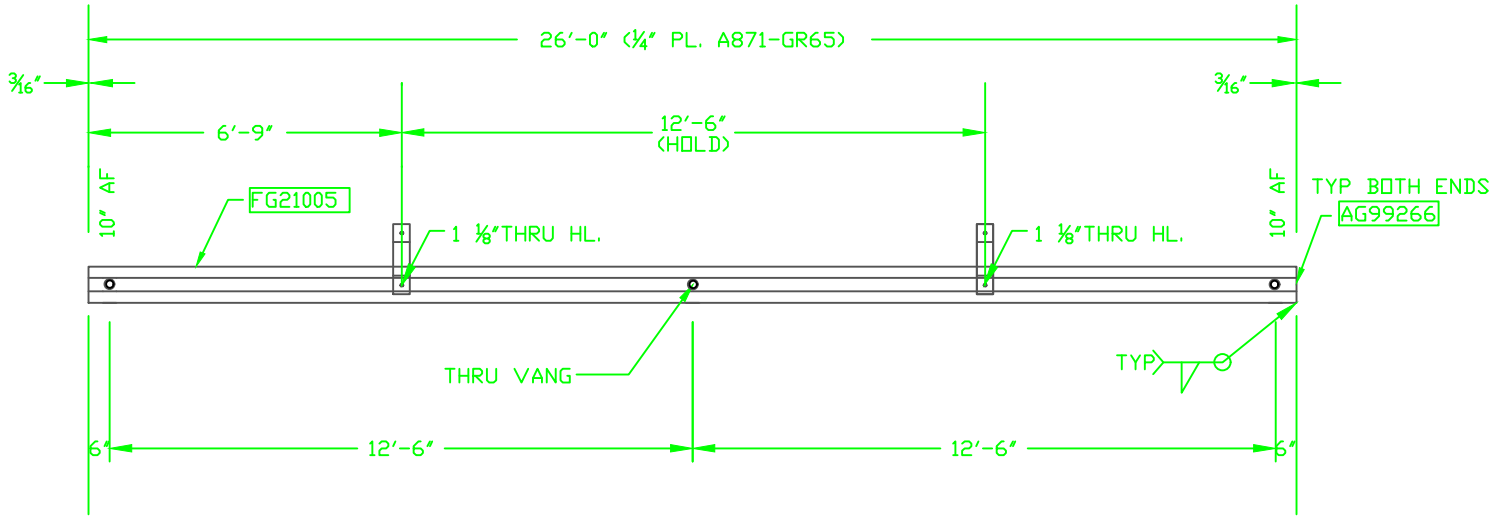

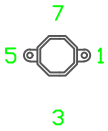

NOTE: DIMENSIONS IN THE DRAWING ARE NOT TRUE TO PROPORTION.

GREENVILLE UTILITIES COMMISSION
GREENVILLE, NORTH CAROLINA

Greenville Utilities

CIRCUIT 17 STRUCTURE 4 & 5
115 KV 3 PHASE, H-FRAME STRUCTURE,
TANGENT DOUBLE DEADEND

DWN. JLS		DATE: 11/19/19	
CKD. KW		APPD. KW	
SCALE: N.T.S.		PAGE: 4 OF 4	
DATE	REVISION	DATE	REVISION

DWG. NO.

TSH6