ADDENDUM NO. 2

PROJECT: **GCP89 – Northwestern Loop High Pressure Gas Main Extension & Two District Regulator Stations / RFB 15-22**

DATE ISSUED: **June 19, 2015**

By this notification, Bidders are directed to make the following changes to the Project Bid Documents:

Change No.1

Project Bid Documents Affected:

- Bid Document Section V– Technical Specifications
  - Section 000100 – Table of Contents
  - Section 099100 - Painting

Description of change:

- Replace Section 000100 in Section V of the Bid Documents with the attached revised Section 000100, dated 19 June 2015.
- Add new Section 099100 – Painting, dated 19 June 2015, to Bid Document Section V – Technical Specifications

Reason for change: To provide a more detailed specification for the product and application of the regulator station above ground painting system.

Attached supporting documents: None

Change No.2

Project Bid Documents Affected:

- 10 Plans Sheets including:
  - DR1-1
  - DR1-7
  - DR1-8
  - DR1-9
  - DR1-10
  - DR2-1
  - DR2-6
  - DR2-7
  - DR2-8
  - DR2-9

Description of change:

- Add regulator control tubing details and materials to the Highway 43 and Old River Road District Regulator Station Plans
- Add conduit and riser details and materials to the Highway 43 and Old River Road District Regulator Station Plans

Reason for change: Provide Bidders with sufficient details to accurately develop their bid on the regulator station construction.

Attached supporting documents:

- 10 revised Plan Sheets dated June 19, 2015 to replace original Plan Sheets in the Bid Documents

Enclosure:
cc: All Bidders
F. Durward Tyson, Jr., P.E.
RK&K Project Files

DOCUMENT 000100 – TECHNICAL SPECIFICATIONS TABLE OF CONTENTS

SPECIFICATION	DESCRIPTION	DATED
DIVISION 00	**Procurement and Contracting Requirements**	
000100	Technical Specifications Table of Contents	
000115	List of Drawing Sheets	
DIVISION 01	**General Requirements**	
011000	Summary of Work	
013100	Project Management and Coordination	
013200	Construction Progress Documentation	
013300	Submittal Procedure	
015100	Environmental Protection	
015200	Erosion and Sediment Control	
017419	Construction Waste Management and Disposal	
017839	Project Record Documents	
019113	General Commissioning Requirements	
019115	Pipeline Cleaning, Testing, Drying, Tie-In, Purging, and Gas-Up	
019120	Regulator Station Cleaning, Testing, Tie-In, Purging, and Gas-Up	
DIVISION 03	**Concrete**	
033000	Cast In Place Concrete	
DIVISION 05	**Metals**	
055101	Natural Gas Pipeline Welding	
055110	Steel Natural Gas Pipeline Construction	
055120	Regulator Station Construction	
DIVISION 09	***FINISHES***	
099100	*Painting*	
DIVISION 26	**Electrical**	
264200	Cathodic Protection	
264210	AC Mitigation	
DIVISION 31	**Earthwork**	
311000	Clearing	
315001	Excavation, Trenching and Backfilling for Pipeline	
315010	Horizontal Directional Drilling	
315050	Jacking and Boring	

SPECIFICATION	DESCRIPTION	DATED
DIVISION 32	**Exterior Improvements**	
321100	Regulator Station Site Work	
321216	Asphalt Paving	
323113	Chain Link Fences and Gates	
329100	ROW Restoration	

END OF DOCUMENT 000100

SECTION 099100 - PAINTING

PART 1 - GENERAL

1.1 SCOPE

A. This specification outlines the minimum requirements for paint and other materials, and the surface preparation, application, and inspection of protective coatings for the above ground district regulator station piping.

B. DEFINITIONS
1. Paint – Refers to the protective coating system applied to above ground metallic piping.
2. MSDS – Material Safety Data Sheet
3. NIOSH – National Institute of Occupational Safety and Health
4. Battleship Gray – Paint color matching the color on Owner's existing gray, above ground, facility piping.
5. DFT – Dry film thickness

C. REFERENCES
1. The publication listed below form a part of this section to the extent referenced.
   a. SSPC
      1) PA 2, 2012 Edition: Measurement of Dry Paint Thickness with Magnetic Gauges
      2) SSPC-SP 1, 2004 Edition: Solvent Cleaning
      3) SSPC-SP 2, 2004 Edition: Hand Tool Cleaning
      4) SSPC-SP 3, 2004 Edition: Power Tool Cleaning
      5) SSPC-SP 5, 2007 Edition: White Metal Blasting
         a) NACE No.1
      6) SSPC-SP 6, 2007 Edition: Commercial Blast Cleaning
         a) NACE No.3
      7) SSPC-SP 10, 2007 Edition: Near White Metal Blasting
         a) NACE No.2
      8) SSPC-SP 11, 2012 Edition: Power Tool Clean to Bare Metal
      9) SSPC VIS 1-89: Visual Standards for Abrasive Blast Cleaned Steel
      10) SSPC AB 1, 2007 Edition: Abrasive Specification No.1 Mineral and Slag Abrasives
   b. NAPCA TGF-3
      1) National Association of Pipe Coating Application Specifications and Plant Coating Guide
   c. OSHA 29CFR1910.1025
      1) Lead
   d. ASTM D 4417-11
      1) Field Measurement of Surface Profile of Blast Cleaned Steel

D.

PART 2 - PRODUCTS

2.1 COATING SYSTEM

A. Type: Zinc, Epoxy, Polyurethane

B. Services Temperature: Up to 200° F

C. Surface Preparation: In accordance with the requirements of SSPC-SP 6 for Commercial Metal Blast Cleaning.

D. Anchor Profile Mils: 2.0 to 3.0

E. Primer Coat: SHERWIN WILLIAMS Zinc Clad 200, 3.0 to 5.0 mils DFT

F. Intermediate Coat: SHEREWIN WILLIAMS Macropoxy 646 (4.35), 4.0 to 6.0 mils DFT

G. Top Coat: SHERWIN WILLIAMS Hi-Solids Polyurethane 3.0 to 4.0 mils DFT

2.2 OR an approved equal coating system.

PART 3 - EXECUTION

3.1 PREPARATION AND APPLICATION

A. Contractor shall follow the coating manufacturer’s instructions for preparation and application

B. Contractor shall follow the recommended practices and all regulations applicable to the pain system being applied to the surface piping.

3.2 QUALITY CONTROL

A. The Contractor shall control the quality of materials and services to meet the intended requirements of this Specification, and applicable codes and standards.

B. The Contractor is to consider weather conditions and prevent overspray from painting to damage the Owner’s equipment and property as well as the public’s equipment and property.

C. The Contractor shall provide all product and material information to the Engineer prior to performing and preparation or painting operations.

END OF SECTION 099100

DRAWING LEGEND

SYMBOL	DESCRIPTION
	CENTERLINE
	HYDRO
	EXISTING FENCE
	EXISTING GUARD RAIL
	EXISTING EDGE-OF-PAVEMENT
	EXISTING DRIVEWAY/PATH
	EXISTING GAS TO REMAIN
	EXISTING UTILITY EASEMENT
	EXISTING PROPERTY LINE
	EXISTING RIGHT-OF-WAY (R/W)
	EXISTING SANITARY SEWER
	EXISTING STORM DRAINAGE
	EXISTING UNDERGROUND ELECTRIC LINE
	EXISTING UNDERGROUND TELEPHONE CABLE
	EXISTING UNDERGROUND FIBER OPTIC
	EXISTING WATER
	BORROW PIT
	WETLAND BOUNDARY
	RIPARIAN BARRIER
	AE FLOODWAY
	AE FLOODZONE
	PROPOSED TEMPORARY WORKSPACE
	PROPOSED UTILITY EASEMENT
	PROPOSED FENCE
	PROPOSED GAS PIPE ABOVE GRADE (DOUBLE LINE)
	PROPOSED GAS PIPE BELOW GRADE (DOUBLE LINE)

NOTES:

1. ALL DIMENSIONS TO BE VERIFIED PRIOR TO FABRICATION AND INSTALLATION.
2. ALL PIPING TO BE FABRICATED & TESTED IN ACCORDANCE WITH 49 CFR 192 AND PROJECT SPECIFICATIONS.
3. ALL PIPE WELDING TO BE PERFORMED PER GUC WELD STANDARDS AND PROJECT SPECIFICATIONS.
4. ALL PIPING SHALL BE THOROUGHLY CLEANED OF MILL SCALE, WELD SLAG, & RUST PRIOR TO ASSEMBLY.
5. ALL PIPING SHALL BE VISUALLY INSPECTED BY ENGINEER/OWNER PRIOR TO FABRICATION OF ASSEMBLY.

DRAWING LEGEND

SYMBOL	DESCRIPTION
EX.	EXISTING
ST	STEEL
PE	POLYETHYLENE
PGS	PROPOSED GAS SERVICE
PROP.	PROPOSED
RCP	REINFORCED CONCRETE PIPE
STA	STATION
	INSULATING FLANGE LOCATION
1	PROPOSED ITEM NUMBER
	FLOW ARROW
	EARTH
	GRAVEL
	CONCRETE
1 / 4	DETAIL IDENTIFICATION SHEET NUMBER
A / 4	SECTION IDENTIFICATION SHEET NUMBER

Item	Quantity	Unit	Size	Description of Station Materials
4	3	EA	6"	Elbow, 90°, LR, Y-52, SCH 40, 0.280" w.t.
15	2	EA	6"	Cap, Y-52, 0.280" w.t.
25	10	LF	4"	Steel Pipe, 0.237" w.t., X-52, Coated, ERW, BE, Spec API-5L
42	4	EA	8' x 4'	Gradient Control Mat
44	70	LF	6"	Steel Pipe, 0.280" w.t., X-52, Coated, ERW, BE, Spec API-5L
45	100	LF	4"	Steel Pipe, 0.237" w.t., X-52, Bare, ERW, BE, Spec API-5L
46	9	EA	4"	Elbow, 90°, LR, Y-52, SCH 40, 0.237" w.t.
49	2	EA	6"x4"	Reducer, Weld End, Concentric, Y-52, WT = 0.280" x 0.237"
51	1	EA	4"	Weather Cap
52	8	EA	4"x2"	Reducer, Weld End, Concentric, Y-52, WT = 0.237" x 0.154"
53	2	EA	4"x3"	Reducer, Weld End, Concentric, Y-52, WT = 0.280" x 0.216"
54	1	EA	6"	Tee, Weld End, Straight, Y-52, WT = 0.280" x 0.280"
55	7	EA	4"	Tee, Weld End, Straight, Y-52, WT = 0.237" x 0.237"
56	1	EA	6"	Valve, Ball, Weld End, ANSI 300, Kerotest Weldball or equivalent
58	8	EA	4"	Valve, Ball, Flanged End, ANSI 300, Kerotest Weldball or equivalent
59	1	EA	3"	Valve, Ball, Flanged End, ANSI 150, Fisher Vee-Ball V150 w/ Fisher 2052 Diaphragm Rotary Actuator
60	2	EA	4"	Valve, Ball, Flanged End, ANSI 150, Kerotest Weldball or equivalent
61	1	EA	4"	Meter, Flanged End, ANSI 300, Equimeter Model No. AAT18/27
62	1	EA	4"	Valve, Relief, Flanged End, ANSI 300, Fisher 63EG w/ 6458 series pilot
63	1	EA	4"	Strainer, Tee Style, Flanged End, ANSI 300, Apollo Engineering Model TSF
64	4	EA	2"x1"	Regulator, Pressure Reducing, Flanged End, ANSI 300, Fisher Type EZR
65	1	EA	4"	Pipe Support, EZ-Line, Model 204, Figure F w/ Neoprene Liner, Part No. 204-F, 4" P.S., D-1'-4" (*)
67	27	EA	36"-4" x 1/2"	Thredolet, 3000#
68	26	EA	1/2" x 2"	Pipe Nipple, Extra Strong, Grade B, Seamless C.S., thread both ends
69	26	EA	1/2"	Valve, Ball, Class 3000, NFPT X NFPT, lockable, Swagelok Series 60 or equivalent
70	28	EA	1/2"	Pipe plug, Hex Head, Extra Strong, F.S., screwed
72	28	EA	4"	Weld Neck Flange, RF, ANSI 300, WT = 0.237", Bore = 4.020"
73	2	EA	3"	Weld Neck Flange, RF, ANSI 150, WT = 0.216", BORE = 3.068"
74	8	EA	2"	Weld Neck Flange, RF, ANSI 300, WT = 0.154", Bore = 2.067"
75	4	EA	4"	Weld Neck Flange, RF, ANSI 150, WT = 0.237", Bore = 4.020"
77	23	EA	4"	Gasket, Spiral Wound, Flexitallic, ANSI 300
78	2	EA	3"	Gasket, Spiral Wound, Flexitallic, ANSI 150
79	8	EA	2"	Gasket, Spiral Wound, Flexitallic, ANSI 300
80	4	EA	4"	Gasket, Spiral Wound, Flexitallic, ANSI 150
81	1	EA	4"	Straightening Vanes, Flanged, Apollo Engineering, Model No. 04F30-90-00
82	3	EA	4"	Flange Insulation Kit, ANSI 300, Type E, Linebacker, Double Washer Set, w/Full Length Phenolic Sleeves
84	192	EA	(4") ANSI 300	Stud Bolts, All Thread, 3/4" Diameter x 4 1/2" Long, Grade B-7, ASTM A-194, w/2 A-194, Grade 2H Heavy Hex Nuts (8 bolts per connection)
85	8	EA	(3") ANSI 150	Stud Bolts, All Thread, 5/8" Diameter x 3 3/4" Long, Grade B-7, ASTM A-194, w/2 A-194, Grade 2H Heavy Hex Nuts (4 bolts per connection)
86	64	EA	(2") ANSI 300	Stud Bolts, All Thread, 5/8" Diameter x 3 1/2" Long, Grade B-7, ASTM A-194, w/2 A-194, Grade 2H Heavy Hex Nuts (8 bolts per connection)
87	32	EA	(4") ANSI 150	Stud Bolts, All Thread, 5/8" Diameter x 4" Long, Grade B-7, ASTM A-194, w/2 A-194, Grade 2H Heavy Hex Nuts (8 bolts per connection)
89	11	EA	4"	Pipe Support, EZ-Line, Model 204, Figure F w/ Neoprene Liner, Part No. 204-F, 4" P.S., D-4'-5" (*)
90	48	EA	5/8" x 5 1/2"	Expansion Bolt, HILTI HVA, Adhesive System w, Carbon Steel Threaded Rods
91	1 ROLL	NA	NA	Rock Shield
92	1	EA	4"	Double Pipe Support, EZ-Line, Model DPS-4
93	2	EA	3/4" Dia. x 10'L	Copperclad Steel Ground Rod
94	20	LF	NA	#3/0 THWN Stranded Copper Wire
95	2	EA	NA	Grounding Mold
96	8	EA	NA	Cable to Rod/Tube Ground Connector
97	150	LF	3/4"	PVC Conduit
98	5	EA	3/4"	Rigid Galvanized Conduit Riser
				Electric conduit, risers, conductors, and seals to be provided by owner

*BASE PLATE OF PIPE STAND SHALL HAVE 3/4"x1 1/2" SLOTTED HOLES TO ACCOMMODATE 5/8" BOLTS.

NORTH CAROLINA PROFESSIONAL SEAL 20388 ENGINEER MARTIN C. RODGERS

6/19/15

Issued for Bids

SUMMARY OF MATERIALS

ITEM	QUANTITY	DESCRIPTION

NOTES

REVISIONS

REV.	DESIGN	DRAFT	CHECK	DESCRIPTION	DATE

APPROVAL

	PERMITS		BID		CONSTRUCTION	
	INITIALS	DATE	INITIALS	DATE	INITIALS	DATE
SURVEY						
C.P.						
DRAFTING & DESIGN – RK&K	CSY	5/20	CSY	6/19	–	–
ENGINEERING – RK&K	MCR	5/20	MCR	6/19	–	–

TEST DATA

TESTED FROM STATION: _____ TO STATION: _____

MEDIUM: _____ RECORD TEST PRESSURE: _____ psig

DATE TEST COMPLETED: _____

PROJECT

GCP89 – HIGHWAY 43
DISTRICT REGULATOR STATION

ALIGNMENT SHEET

RK&K RUMMEL, KLEPPER & KAHL, LLP
2100 E. CARY ST. SUITE 309
RICHMOND, VIRGINIA 23223
T-804.782.1903 F-804.782.2142
ENGINEERS | CONSTRUCTION MANAGERS | PLANNERS | SCIENTISTS

RK&K COMM. NO. 1214-011-D

SCALE
PLAN NA
PROFILE
HOR. –
VERT. –

Greenville Utilities

DISTRICT	COUNTY	STATE
–	PITT	NORTH CAROLINA

SHEET DESCRIPTION

BILL OF MATERIALS, DRAWING LEGEND, AND GENERAL NOTES

SHEET: DR1 – 1

REVISION: 0

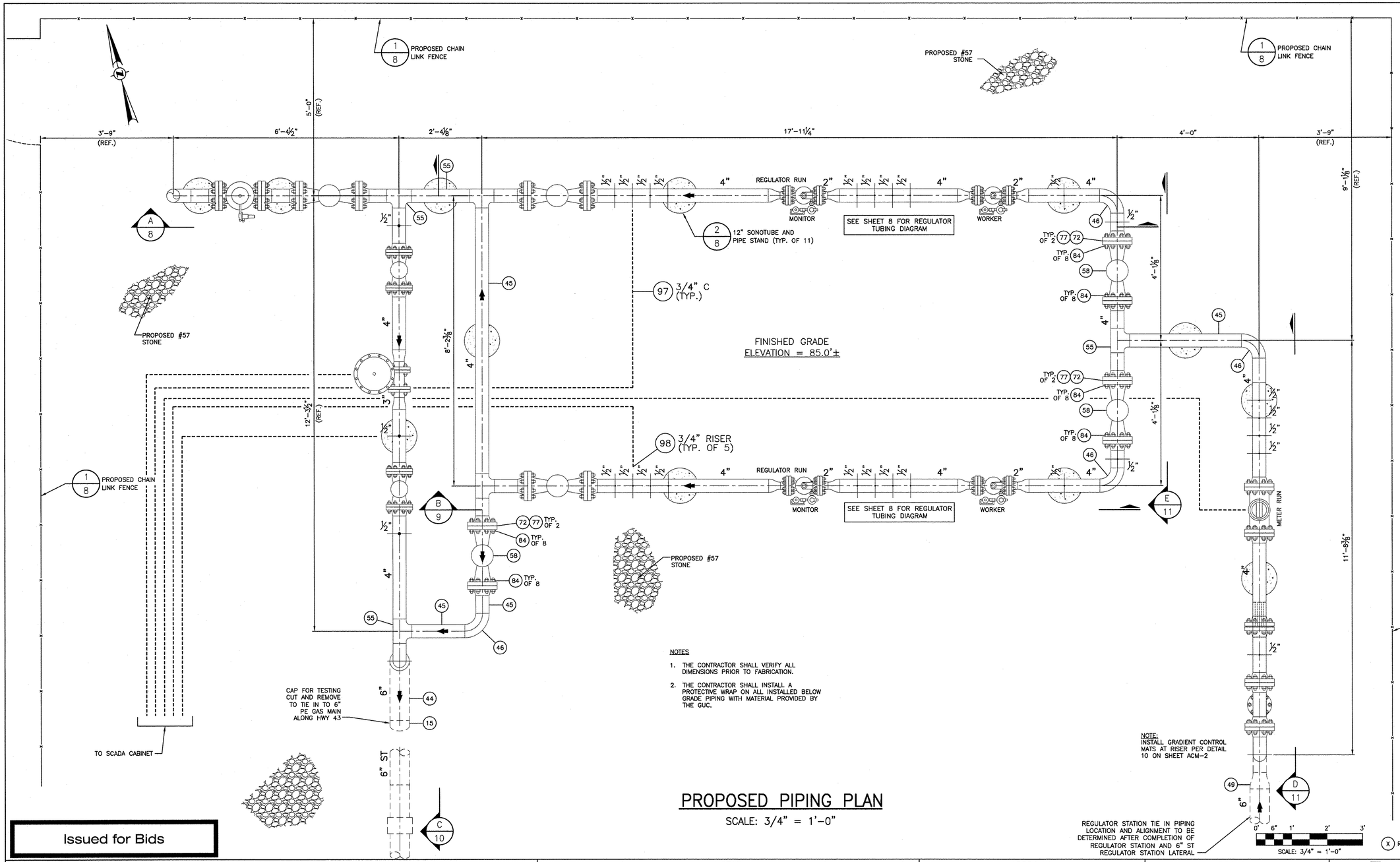

NOTES

1. THE CONTRACTOR SHALL VERIFY ALL DIMENSIONS PRIOR TO FABRICATION.
2. THE CONTRACTOR SHALL INSTALL A PROTECTIVE WRAP ON ALL INSTALLED BELOW GRADE PIPING WITH MATERIAL PROVIDED BY THE GUC.

PROPOSED PIPING PLAN

SCALE: 3/4" = 1'-0"

NORTH CAROLINA PROFESSIONAL SEAL 20388 ENGINEER MARTIN C. ROGERS 5/19/15

Issued for Bids

SUMMARY OF MATERIALS		
ITEM	QUANTITY	DESCRIPTION

NOTES

REVISIONS

REV.	DESIGN	DRAFT	CHECK	DESCRIPTION	DATE

APPROVAL

	PERMITS		BID		CONSTRUCTION	
	INITIALS	DATE	INITIALS	DATE	INITIALS	DATE
SURVEY						
C.P.						
DRAFTING & DESIGN – RK&K	CSY	5/20	CSY	6/19	–	–
ENGINEERING – RK&K	MCR	5/20	MCR	6/19	–	–

TEST DATA

TESTED FROM STATION: _____ TO STATION: _____
MEDIUM: _____ RECORD TEST PRESSURE: _____ psig
DATE TEST COMPLETED: _____

PROJECT

GCP89 – HIGHWAY 43
DISTRICT REGULATOR STATION

ALIGNMENT SHEET

RK&K RUMMEL, KLEPPER & KAHL, LLP
2100 E. CARY ST. SUITE 309
RICHMOND, VIRGINIA 23223
T-804.782.1033 F-804.782.2142
ENGINEERS | CONSTRUCTION MANAGERS | PLANNERS | SCIENTISTS
RK&K COMM. NO. 1214-011-D

SCALE
PLAN AS SHOWN
PROFILE
HOR. –
VERT. –

Greenville Utilities

DISTRICT	COUNTY	STATE
–	PITT	NORTH CAROLINA

SHEET DESCRIPTION

PROPOSED PIPING PLAN

SHEET: DR1-7

REVISION: 0

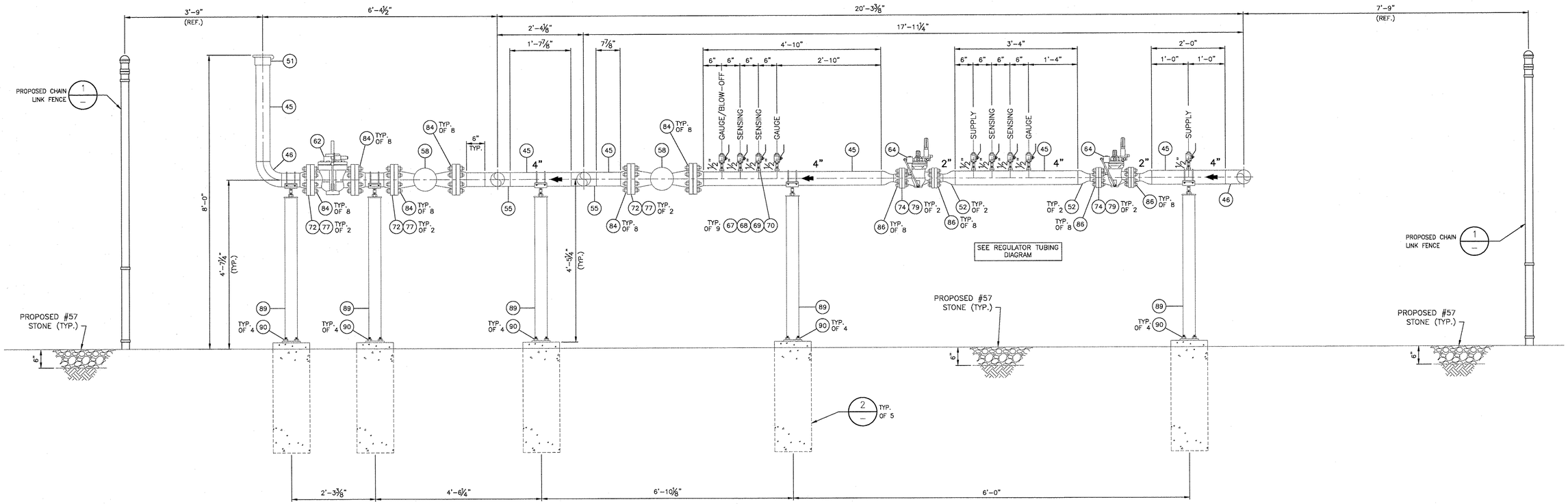

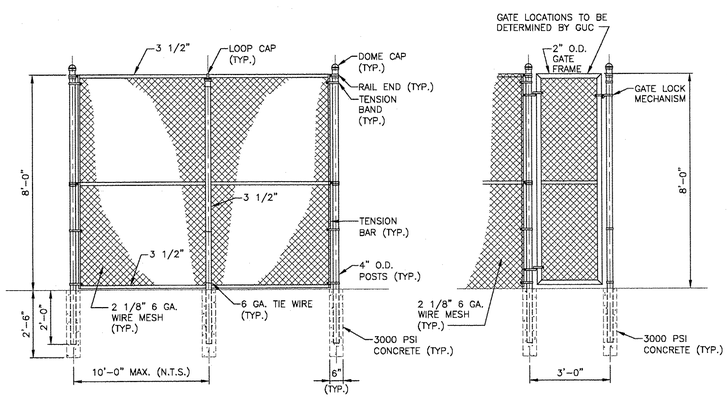

PROPOSED FENCE DETAILS

DETAIL 1

SCALE: 3/8" = 1'-0"

SECTION A

SCALE: 3/4" = 1'-0"

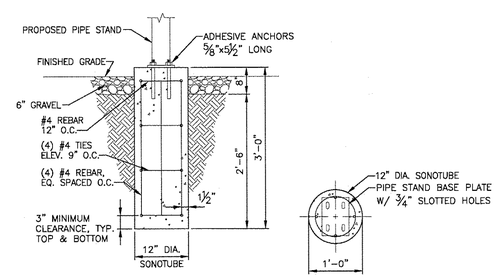

SECTION PLAN

PIPE STAND FOUNDATION DETAILS

DETAIL 2

SCALE: 3/4" = 1'-0"

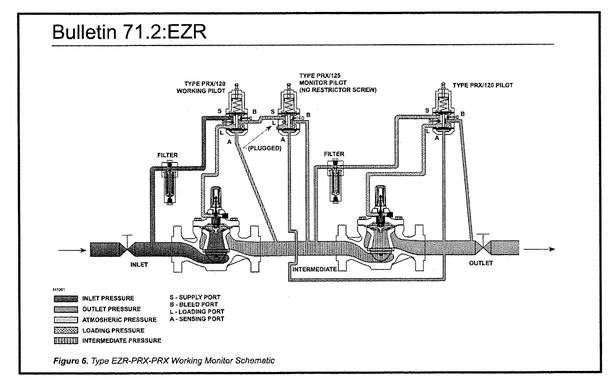

Figure 6. Type EZR-PRX-PRX Working Monitor Schematic

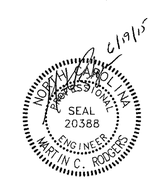

Issued for Bids

NOTES

1. THE CONTRACTOR SHALL INSTALL A PROTECTIVE WRAP ON ALL INSTALLED BELOW GRADE PIPING WITH MATERIAL PROVIDED BY THE GUC.
2. ALL TAPS FOR WELDOLETS AND THREDOLETS SHALL BE FULL BORE.
3. SITE SHALL BE GRADED AS TO ALLOW FOR PROPER DRAINAGE AWAY FROM REGULATOR PIPING.

0' 6" 1' 2' 3' 6' SCALE: 3/8" = 1'-0"

0' 6" 1' 2' 3' SCALE: 3/4" = 1'-0"

(X) REFER TO SHEET 1 FOR BILL OF MATERIALS

SUMMARY OF MATERIALS

ITEM	QUANTITY	DESCRIPTION

NOTES

REVISIONS

REV.	DESIGN	DRAFT	CHECK	DESCRIPTION	DATE

APPROVAL

	PERMITS		BID		CONSTRUCTION	
	INITIALS	DATE	INITIALS	DATE	INITIALS	DATE
SURVEY						
C.P.						
DRAFTING & DESIGN – RK&K	CSY	5/20	CSY	6/19	–	–
ENGINEERING – RK&K	MCR	5/20	MCR	6/19	–	–

TEST DATA

TESTED FROM STATION: _____ TO STATION: _____

MEDIUM: _____ RECORD TEST PRESSURE: _____ psig

DATE TEST COMPLETED: _____

PROJECT

GCP89 – HIGHWAY 43
DISTRICT REGULATOR STATION

ALIGNMENT SHEET

RK&K RUMMEL, KLEPPER & KAHL, LLP
2100 E. CARY ST. SUITE 309
RICHMOND, VIRGINIA 23223
T-804.782.1903 F-804.782.2142
ENGINEERS | CONSTRUCTION MANAGERS | PLANNERS | SCIENTISTS

RK&K COMM. NO. 1214-011-D

SCALE
PLAN AS SHOWN
PROFILE
HOR. –
VERT. –

Greenville Utilities

DISTRICT	COUNTY	STATE
–	PITT	NORTH CAROLINA

SHEET DESCRIPTION

PIPING SECTION AND DETAILS

SHEET: DR1-8

REVISION: 0

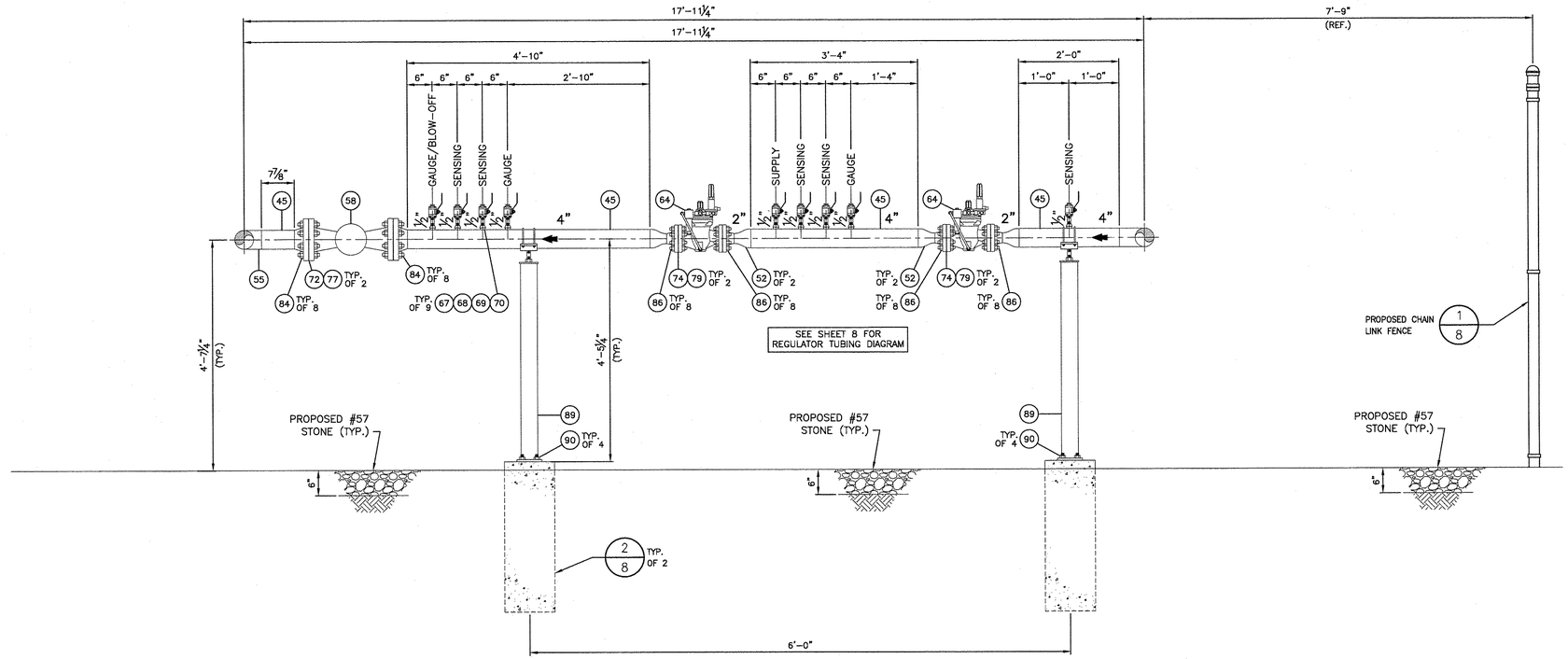

SECTION B

SCALE: 3/4" = 1'-0"

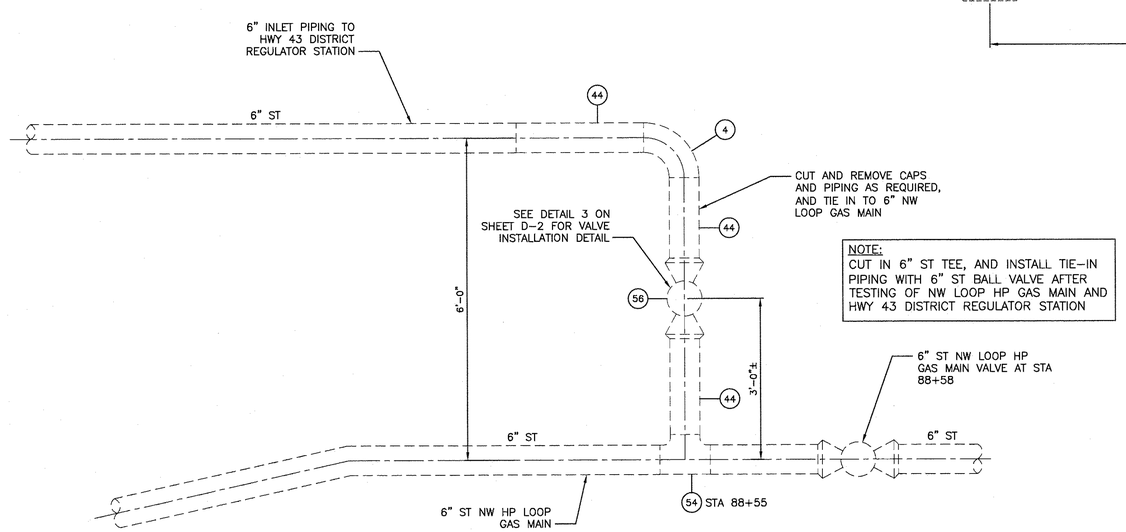

NOTE:
CUT IN 6" ST TEE, AND INSTALL TIE-IN PIPING WITH 6" ST BALL VALVE AFTER TESTING OF NW LOOP HP GAS MAIN AND HWY 43 DISTRICT REGULATOR STATION

HWY 43 TIE IN DETAIL

DETAIL 3

SCALE: 3/4" = 1'-0"

Issued for Bids

0' 6" 1' 2' 3'
SCALE: 3/4" = 1'-0"

(X) REFER TO SHEET 1 FOR BILL OF MATERIALS

NOTES

1. THE CONTRACTOR SHALL INSTALL A PROTECTIVE WRAP ON ALL INSTALLED BELOW GRADE PIPING WITH MATERIAL PROVIDED BY THE GUC.
2. ALL TAPS FOR WELDOLETS AND THREDOLETS SHALL BE FULL BORE.
3. SITE SHALL BE GRADED AS TO ALLOW FOR PROPER DRAINAGE AWAY FROM REGULATOR PIPING.

6/19/15
NORTH CAROLINA PROFESSIONAL SEAL 20388 ENGINEER MARTIN C. ROGERS

SUMMARY OF MATERIALS

ITEM	QUANTITY	DESCRIPTION

NOTES

REVISIONS

REV.	DESIGN	DRAFT	CHECK	DESCRIPTION	DATE

APPROVAL

	PERMITS		BID		CONSTRUCTION	
	INITIALS	DATE	INITIALS	DATE	INITIALS	DATE
SURVEY						
C.P.						
DRAFTING & DESIGN – RK&K	CSY	5/20	CSY	6/19	–	–
ENGINEERING – RK&K	MCR	5/20	MCR	6/19	–	–

TEST DATA

TESTED FROM STATION: _____ TO STATION: _____
MEDIUM: _____ RECORD TEST PRESSURE: _____ psig
DATE TEST COMPLETED: _____

PROJECT

GCP89 – HIGHWAY 43
DISTRICT REGULATOR STATION

ALIGNMENT SHEET

RK&K RUMMEL, KLEPPER & KAHL, LLP
2100 E. CARY ST. SUITE 309
RICHMOND, VIRGINIA 23223
T-804.782.1900 F-804.782.2142
ENGINEERS | CONSTRUCTION MANAGERS | PLANNERS | SCIENTISTS

RK&K COMM. NO. 1214-011-D

SCALE
PLAN AS SHOWN
PROFILE
HOR. –
VERT. –

Greenville Utilities

DISTRICT	COUNTY	STATE
–	PITT	NORTH CAROLINA

SHEET DESCRIPTION

PIPING SECTION AND TIE-IN DETAIL

SHEET: DR1-9

REVISION: 0

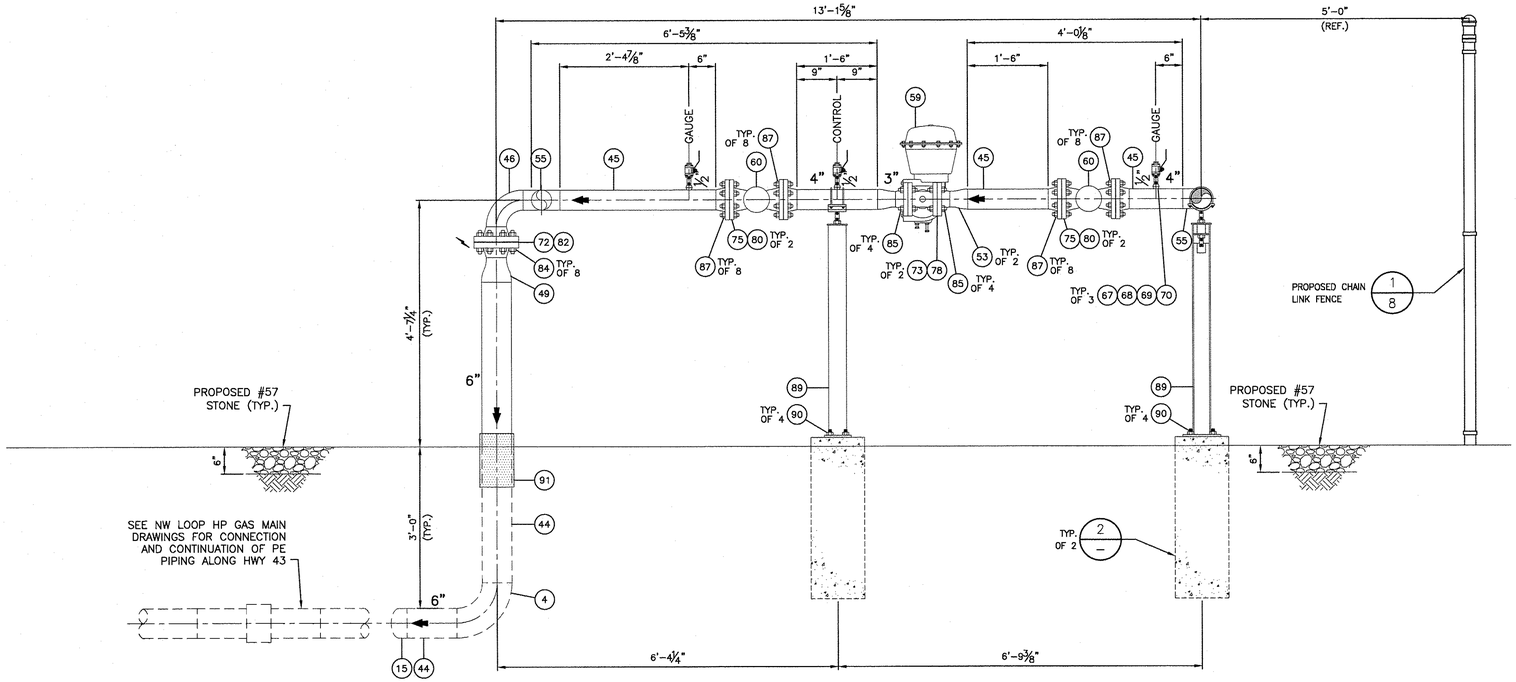

SECTION C

SCALE: 3/4" = 1'-0"

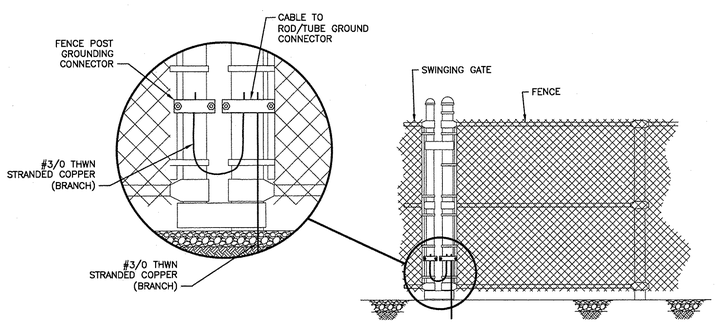

FENCE GROUNDING DETAIL

DETAIL 4

SCALE: 3/4" = 1'-0"

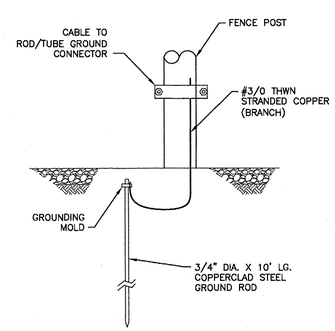

GROUNDING ROD DETAIL

DETAIL 5

SCALE: 3/4" = 1'-0"

Issued for Bids

0' 6" 1' 2' 3'

SCALE: 3/4" = 1'-0"

(X) REFER TO SHEET 1 FOR BILL OF MATERIALS

NOTES

1. THE CONTRACTOR SHALL INSTALL A PROTECTIVE WRAP ON ALL INSTALLED BELOW GRADE PIPING WITH MATERIAL PROVIDED BY THE GUC.
2. ALL TAPS FOR WELDOLETS AND THREDOLETS SHALL BE FULL BORE.
3. SITE SHALL BE GRADED AS TO ALLOW FOR PROPER DRAINAGE AWAY FROM REGULATOR PIPING.

NORTH CAROLINA PROFESSIONAL SEAL 20388 ENGINEER MARTIN C. ROBSCHEIT 6/19/15

SUMMARY OF MATERIALS

ITEM	QUANTITY	DESCRIPTION

NOTES

REVISIONS

REV.	DESIGN	DRAFT	CHECK	DESCRIPTION	DATE

APPROVAL

	PERMITS		BID		CONSTRUCTION	
	INITIALS	DATE	INITIALS	DATE	INITIALS	DATE
SURVEY						
C.P.						
DRAFTING & DESIGN – RK&K	CSY	5/20	CSY	6/19	–	–
ENGINEERING – RK&K	MCR	5/20	MCR	6/19	–	–

TEST DATA

TESTED FROM STATION: _____ TO STATION: _____

MEDIUM: _____ RECORD TEST PRESSURE: _____ psig

DATE TEST COMPLETED: _____

PROJECT

GCP89 – HIGHWAY 43
DISTRICT REGULATOR STATION

ALIGNMENT SHEET

RK&K KUMMEL, KLEPFER & KOHL, LLP
2100 E. CARY ST. SUITE 309
RICHMOND, VIRGINIA 23223
T-804.782.1903 F-804.782.2142
ENGINEERS | CONSTRUCTION MANAGERS | PLANNERS | SCIENTISTS

RK&K COMM. NO. 1214-011-D

SCALE
PLAN AS SHOWN
PROFILE
HOR. –
VERT. –

Greenville Utilities

DISTRICT	COUNTY	STATE
–	PITT	NORTH CAROLINA

SHEET DESCRIPTION

PIPING SECTION AND DETAILS

SHEET: DR1-10

REVISION: 0

DRAWING LEGEND

SYMBOL	DESCRIPTION
	CENTERLINE
	HYDRO
	EXISTING FENCE
	EXISTING GUARD RAIL
	EXISTING EDGE-OF-PAVEMENT
	EXISTING DRIVEWAY/PATH
	EXISTING GAS TO REMAIN
	EXISTING UTILITY EASEMENT
	EXISTING PROPERTY LINE
	EXISTING RIGHT-OF-WAY (R/W)
	EXISTING SANITARY SEWER
	EXISTING STORM DRAINAGE
	EXISTING UNDERGROUND ELECTRIC LINE
	EXISTING UNDERGROUND TELEPHONE CABLE
	EXISTING UNDERGROUND FIBER OPTIC
	EXISTING WATER
	BORROW PIT
	WETLAND BOUNDARY
	RIPARIAN BARRIER
	AE FLOODWAY
	AE FLOODZONE
	PROPOSED TEMPORARY WORKSPACE
	PROPOSED UTILITY EASEMENT
	PROPOSED FENCE
	PROPOSED GAS PIPE ABOVE GRADE (DOUBLE LINE)
	PROPOSED GAS PIPE BELOW GRADE (DOUBLE LINE)

NOTES:

1. ALL DIMENSIONS TO BE VERIFIED PRIOR TO FABRICATION AND INSTALLATION.
2. ALL PIPING TO BE FABRICATED & TESTED IN ACCORDANCE WITH 49 CFR 192 AND PROJECT SPECIFICATIONS.
3. ALL PIPE WELDING TO BE PERFORMED PER GUC WELD STANDARDS AND PROJECT SPECIFICATIONS.
4. ALL PIPING SHALL BE THOROUGHLY CLEANED OF MILL SCALE, WELD SLAG, & RUST PRIOR TO ASSEMBLY.
5. ALL PIPING SHALL BE VISUALLY INSPECTED BY ENGINEER/OWNER PRIOR TO FABRICATION OF ASSEMBLY.

DRAWING LEGEND

SYMBOL	DESCRIPTION
EX.	EXISTING
ST	STEEL
PE	POLYETHYLENE
PGS	PROPOSED GAS SERVICE
PROP.	PROPOSED
RCP	REINFORCED CONCRETE PIPE
STA	STATION
	INSULATING FLANGE LOCATION
1	PROPOSED ITEM NUMBER
	FLOW ARROW
	EARTH
	GRAVEL
	CONCRETE
1 / 4	DETAIL IDENTIFICATION SHEET NUMBER
A / 4	SECTION IDENTIFICATION SHEET NUMBER

Item	Quantity	Unit	Size	Description of Station Materials
4	5	EA	6"	Elbow, 90°, LR, X-52, SCH 40, 0.280" w.t.
15	2	EA	6"	Cap, Y-52, 0.280" w.t.
16	2	EA	6"	Valve, Ball, Flanged End, ANSI 150, Kerotest Weldball or equivalent
20	4	EA	6"	Weld Neck Flange, RF, ANSI 150, WT = 0.280", Bore = 6.065"
21	1	EA	6"	Valve, Relief, Flanged End, ANSI 300, Fisher 63EG w/ 6458 series pilot
22	1	EA	6"	Weather Cap
25	10	LF	4"	Steel Pipe, 0.237" w.t., X-52, Coated, ERW, BE, Spec API-5L
33	50	LF	6"	Polyethylene Medium Density Plastic Pipe
35	1	EA	6"	Elbow, 90°, LR, Polyethylene Medium Density Plastic, Butt Fusion
37	1	EA	6"	Cap, Polyethylene Medium Density Plastic. Butt Fusion
40	1	EA	6"	Transition Fitting, Steel 0.280" Wall, X-52 x Polyethylene Medium Density Plastic
42	4	EA	8' x 4'	Gradient Control Mat
43	60	LF	6"	Steel Pipe, 0.280" w.t., X-52, Bare, ERW, BE, Spec API-5L
44	20	LF	6"	Steel Pipe, 0.280" w.t., X-52, Coated, ERW, BE, Spec API-5L
45	60	LF	4"	Steel Pipe, 0.237" w.t., X-52, Bare, ERW, BE, Spec API-5L
46	7	EA	4"	Elbow, 90°, LR, Y-52, SCH 40, 0.237" w.t.
48	2	EA	6"x2"	Reducer, Weld End, Concentric, Y-52, WT = 0.280" x 0.154"
49	3	EA	6"x4"	Reducer, Weld End, Concentric, Y-52, WT = 0.280" x 0.237"
50	2	EA	6"x3"	Reducer, Weld End, Concentric, Y-52, WT = 0.280" x 0.216"
52	6	EA	4"x2"	Reducer, Weld End, Concentric, Y-52, WT = 0.237" x 0.154"
54	4	EA	6"	Tee, Weld End, Straight, Y-52, WT = 0.280" x 0.280"
55	3	EA	4"	Tee, Weld End, Straight, Y-52, WT = 0.237" x 0.237"
57	3	EA	6"	Valve, Ball, Flanged End, ANSI 300, Kerotest Weldball or equivalent
58	4	EA	4"	Valve, Ball, Flanged End, ANSI 300, Kerotest Weldball or equivalent
59	1	EA	3"	Valve, Ball, Flanged End, ANSI 150, Fisher Vee-Ball V150 w/ Fisher 2052 Diaphragm Rotary Actuator
61	1	EA	4"	Meter, Flanged End, ANSI 300, Equimeter Model No. AAT18/27
62	1	EA	6"	Flange Insulation Kit, ANSI 300, Type E, Linebacker, Double Washer Set, w/Full Length Phenolic Sleeves
63	1	EA	4"	Strainer, Tee Style, Flanged End, ANSI 300, Apollo Engineering Model TSF
64	4	EA	2"x1"	Regulator, Pressure Reducing, Flanged End, ANSI 300, Fisher Type EZR
65	1	EA	4"	Pipe Support, EZ-Line, Model 204, Figure F w/ Neoprene Liner, Part No. 204-F, 4" P.S., D-1'-4" (*)
66	32	EA	(6") ANSI 150	Stud Bolts, All Thread, 3/4" Diameter x 4 1/2" Long, Grade B-7, ASTM A-194, w/2 A-194, Grade 2H Heavy Hex Nuts (8 bolts per connection)
67	27	EA	36"-4" x 1/2"	Thredolet, 3000#
68	28	EA	1/2" x 2"	Pipe Nipple, Extra Strong, Grade B, Seamless C.S., thread both ends
69	28	EA	1/2"	Valve, Ball, Class 3000, NFPT X NFPT, lockable, Swagelok Series 60 or equivalent
70	26	EA	1/2"	Pipe plug, Hex Head, Extra Strong, F.S., screwed
71	10	EA	6"	Weld Neck Flange, RF, ANSI 300, WT = 0.280", Bore = 6.065"
72	16	EA	4"	Weld Neck Flange, RF, ANSI 300, WT = 0.237", Bore = 4.020"
73	2	EA	3"	Weld Neck Flange, RF, ANSI 150, WT = 0.216", BORE = 3.068"
74	8	EA	2"	Weld Neck Flange, RF, ANSI 300, WT = 0.154", Bore = 2.067"
76	8	EA	6"	Gasket, Spiral Wound, Flexitallic, ANSI 300
77	14	EA	4"	Gasket, Spiral Wound, Flexitallic, ANSI 300
78	2	EA	3"	Gasket, Spiral Wound, Flexitallic, ANSI 150
79	8	EA	2"	Gasket, Spiral Wound, Flexitallic, ANSI 300
81	1	EA	4"	Straightening Vanes, Apollo Engineering, Model No. 04F30-90-00
82	2	EA	4"	Flange Insulation Kit, ANSI 300, Type E, Linebacker, Double Washer Set, w/Full Length Phenolic Sleeves
83	108	EA	(6") ANSI 300	Stud Bolts, All Thread, 3/4" Diameter x 5" Long, Grade B-7, ASTM A-194, w/2 A-194, Grade 2H Heavy Hex Nuts (12 bolts per connection)
84	120	EA	(4") ANSI 300	Stud Bolts, All Thread, 3/4" Diameter x 4 1/2" Long, Grade B-7, ASTM A-194, w/2 A-194, Grade 2H Heavy Hex Nuts (8 bolts per connection)
85	8	EA	(3") ANSI 150	Stud Bolts, All Thread, 5/8" Diameter x 3 3/4" Long, Grade B-7, ASTM A-194, w/2 A-194, Grade 2H Heavy Hex Nuts (4 bolts per connection)
86	64	EA	(2") ANSI 300	Stud Bolts, All Thread, 5/8" Diameter x 3 1/2" Long, Grade B-7, ASTM A-194, w/2 A-194, Grade 2H Heavy Hex Nuts (8 bolts per connection)
88	7	EA	6"	Pipe Support, EZ-Line, Model 510, Figure F w/ Neoprene Liner, Part No. 510-F, 6" P.S., D-4'-5" (*)
89	5	EA	4"	Pipe Support, EZ-Line, Model 204, Figure F w/ Neoprene Liner, Part No. 204-F, 4" P.S., D-4'-5" (*)
90	48	EA	5/8" x 5 1/2"	Expansion Bolt, HILTI HVA, Adhesive System w, Carbon Steel Threaded Rods
91	1 ROLL	NA	NA	Rock Shield
92	1	EA	4"	Double Pipe Support, EZ-Line, Model DPS-4
93	2	EA	3/4" Dia. x 10'L	Copperclad Steel Ground Rod
94	20	LF	NA	#3/0 THWN Stranded Copper Wire
95	2	EA	NA	Grounding Mold
96	8	EA	NA	Cable to Rod/Tube Ground Connector
97	150	LF	3/4"	PVC Conduit
98	5	EA	3/4"	Rigid Galvanized Conduit Riser
				Electric conduit, risers, conductors, and seals to be provided by owner

*BASE PLATE OF PIPE STAND SHALL HAVE ¾"x1½" SLOTTED HOLES TO ACCOMODATE ⅝" EXPANSION BOLTS.

6/19/15

NORTH CAROLINA PROFESSIONAL SEAL 20388 ENGINEER MARTIN C. RODDEY

Issued for Bids

SUMMARY OF MATERIALS

ITEM	QUANTITY	DESCRIPTION

NOTES

REVISIONS

REV.	DESIGN	DRAFT	CHECK	DESCRIPTION	DATE

APPROVAL

	PERMITS		BID		CONSTRUCTION	
	INITIALS	DATE	INITIALS	DATE	INITIALS	DATE
SURVEY						
C.P.						
DRAFTING & DESIGN – RK&K	CSY	5/20	CSY	6/19	–	–
ENGINEERING – RK&K	MCR	5/20	MCR	6/19	–	–

TEST DATA

TESTED FROM STATION: _____ TO STATION: _____

MEDIUM: _____ RECORD TEST PRESSURE: _____ psig

DATE TEST COMPLETED: _____

PROJECT

GCP89 – OLD RIVER ROAD DISTRICT REGULATOR STATION

ALIGNMENT SHEET

RK&K RUMMEL, KLEPPER & KAHL, LLP
2100 E. CARY ST. SUITE 320
RICHMOND, VIRGINIA 23223
T-804.782.1903 F-804.782.2142
ENGINEERS | CONSTRUCTION MANAGERS | PLANNERS | SCIENTISTS

RK&K COMM. NO. 1214-011-C

SCALE
PLAN NA
PROFILE
HOR. –
VERT. –

Greenville Utilities

DISTRICT	COUNTY	STATE
–	PITT	NORTH CAROLINA

SHEET DESCRIPTION

BILL OF MATERIALS, DRAWING LEGEND, AND GENERAL NOTES

SHEET: DR2-1

REVISION: 0

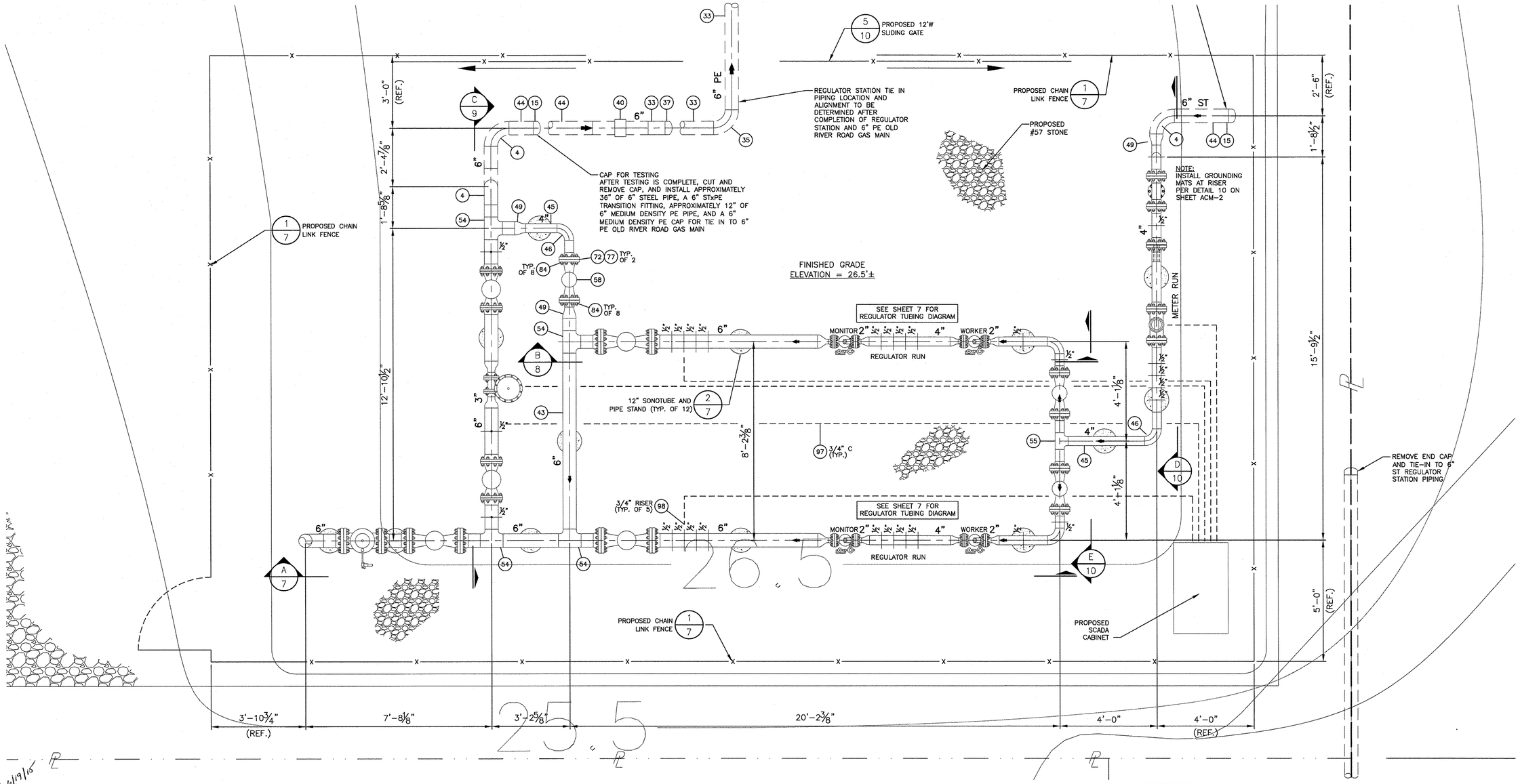

PROPOSED PIPING PLAN

SCALE: 1/2" = 1'-0"

Issued for Bids

0' 6" 1' 2' 3'
SCALE: 3/4" = 1'-0"

(X) REFER TO SHEET 1 FOR BILL OF MATERIALS

NOTES

1. THE CONTRACTOR SHALL VERIFY ALL DIMENSIONS PRIOR TO FABRICATION.
2. THE CONTRACTOR SHALL INSTALL A PROTECTIVE WRAP ON ALL INSTALLED BELOW GRADE PIPING WITH MATERIAL PROVIDED BY THE GUC.

NORTH CAROLINA PROFESSIONAL ENGINEER SEAL 20388 MARTIN C. ROGERS 6/19/15

SUMMARY OF MATERIALS

ITEM	QUANTITY	DESCRIPTION

NOTES

REVISIONS

REV.	DESIGN	DRAFT	CHECK	DESCRIPTION	DATE

APPROVAL

	PERMITS		BID		CONSTRUCTION	
	INITIALS	DATE	INITIALS	DATE	INITIALS	DATE
SURVEY						
C.P.						
DRAFTING & DESIGN – RK&K	CSY	5/20	CSY	6/19	–	–
ENGINEERING – RK&K	MCR	5/20	MCR	6/19	–	–

TEST DATA

TESTED FROM STATION: _____ TO STATION: _____
MEDIUM: _____ RECORD TEST PRESSURE: _____ psig
DATE TEST COMPLETED: _____

PROJECT

GCP89 – OLD RIVER ROAD DISTRICT REGULATOR STATION

ALIGNMENT SHEET

RK&K RUMMEL, KLEPPER & KAHL, LLP
2100 E. CARY ST. SUITE 309
RICHMOND, VIRGINIA 23223
T-804.782.1903 F-804.782.2142
ENGINEERS | CONSTRUCTION MANAGERS | PLANNERS | SCIENTISTS
RK&K COMM. NO. 1214-011-C

SCALE
PLAN AS SHOWN
PROFILE
HOR. –
VERT. –

Greenville Utilities

DISTRICT	COUNTY	STATE
–	PITT	NORTH CAROLINA

SHEET DESCRIPTION

PROPOSED PIPING PLAN

SHEET: DR2-6

REVISION: 0

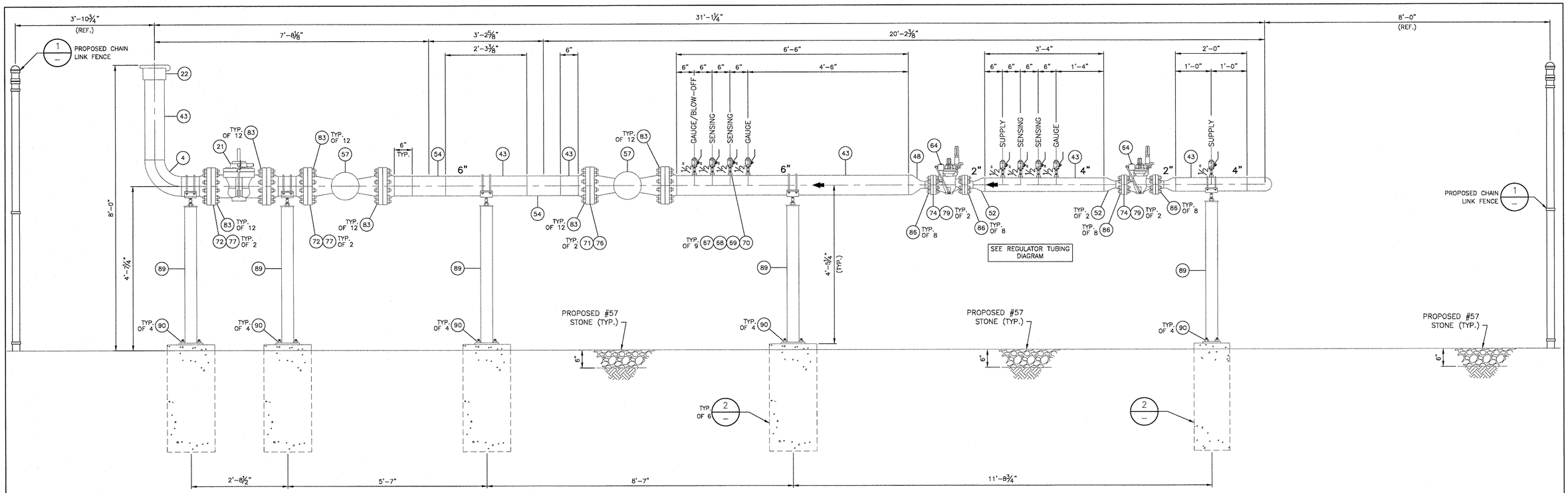

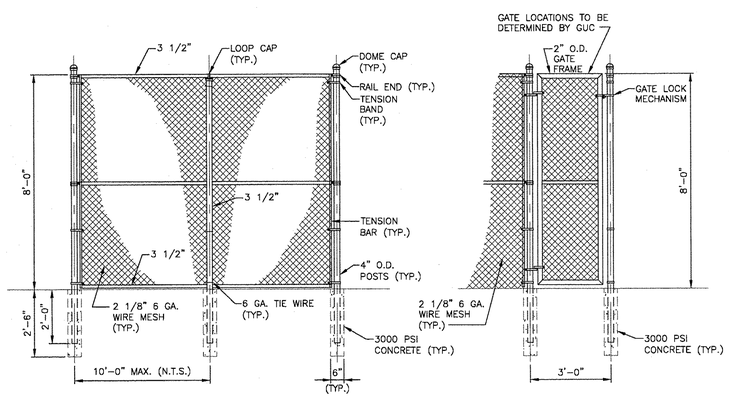

PROPOSED FENCE DETAILS

DETAIL 1

SCALE: 3/8" = 1'-0"

SECTION A

SCALE: 3/4" = 1'-0"

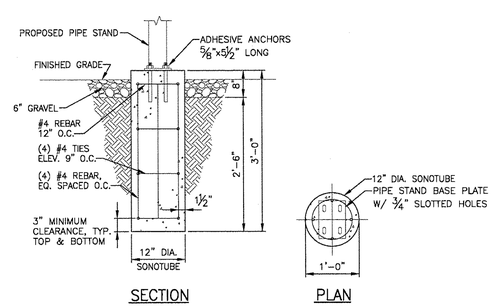

SECTION PLAN

PIPE STAND FOUNDATION DETAILS

DETAIL 2

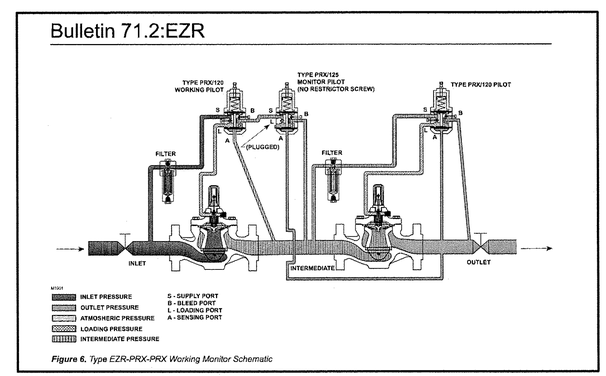

Figure 6. Type EZR-PRX-PRX Working Monitor Schematic

NORTH CAROLINA PROFESSIONAL SEAL 20388 ENGINEER MARTIN C. ROSSELLO

Issued for Bids

NOTES

1. THE CONTRACTOR SHALL INSTALL A PROTECTIVE WRAP ON ALL INSTALLED BELOW GRADE PIPING WITH MATERIAL PROVIDED BY THE GUC.
2. ALL TAPS FOR WELDOLETS AND THREDOLETS SHALL BE FULL BORE.
3. SITE SHALL BE GRADED AS TO ALLOW FOR PROPER DRAINAGE AWAY FROM METER & REGULATOR STATION.

0' 6" 1' 2' 3' 6' SCALE: 3/8" = 1'-0"

0' 6" 1' 2' 3' SCALE: 3/4" = 1'-0"

(X) REFER TO SHEET 1 FOR BILL OF MATERIALS

SUMMARY OF MATERIALS

ITEM	QUANTITY	DESCRIPTION

NOTES

REVISIONS

REV.	DESIGN	DRAFT	CHECK	DESCRIPTION	DATE

APPROVAL

	PERMITS		BID		CONSTRUCTION	
	INITIALS	DATE	INITIALS	DATE	INITIALS	DATE
SURVEY						
C.P.						
DRAFTING & DESIGN – RK&K	CSY	5/20	CSY	6/19	–	–
ENGINEERING – RK&K	MCR	5/20	MCR	6/19	–	–

TEST DATA

TESTED FROM STATION: _____ TO STATION: _____

MEDIUM: _____ RECORD TEST PRESSURE: _____ psig

DATE TEST COMPLETED: _____

PROJECT

GCP89 – OLD RIVER ROAD DISTRICT REGULATOR STATION

ALIGNMENT SHEET

RK&K KUMMER, KLEPPER & KAHL, LLP 2100 E. CARY ST. SUITE 329 RICHMOND, VIRGINIA 23223 T-804.780.1903 F-804.780.2142

ENGINEERS | CONSTRUCTION MANAGERS | PLANNERS | SCIENTISTS

RK&K COMM. NO. 1214-011-C

SCALE

PLAN AS SHOWN

PROFILE

HOR. –

VERT. –

Greenville Utilities

DISTRICT	COUNTY	STATE
–	PITT	NORTH CAROLINA

SHEET DESCRIPTION

PIPING SECTION AND DETAILS

SHEET: DR2-7

REVISION: 0

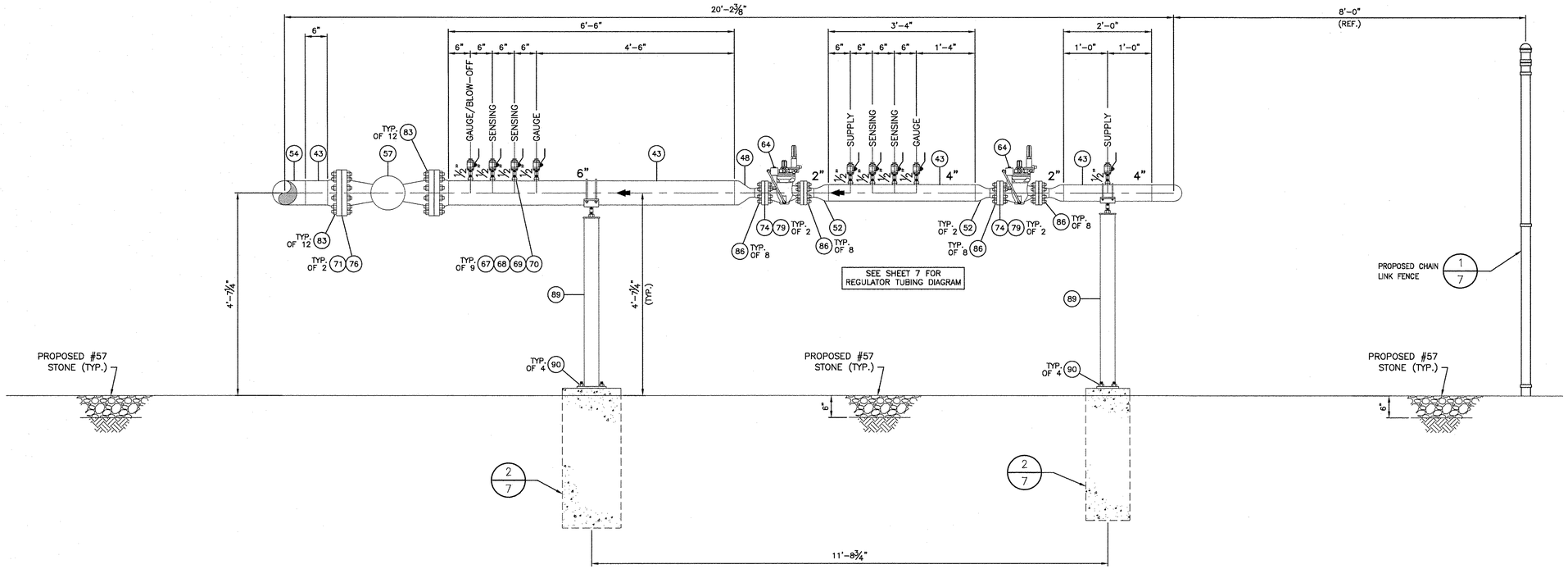

SECTION B

SCALE: 3/4" = 1'-0"

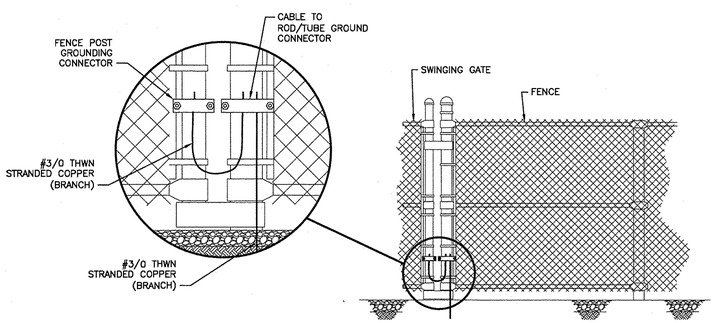

FENCE GROUNDING DETAIL

DETAIL 3

SCALE: 3/4" = 1'-0"

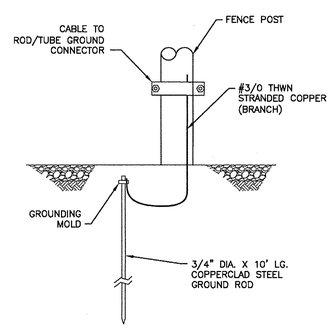

GROUNDING ROD DETAIL

DETAIL 4

SCALE: 3/4" = 1'-0"

Issued for Bids

0' 6" 1' 2' 3'

SCALE: 3/4" = 1'-0"

(X) REFER TO SHEET 1 FOR BILL OF MATERIALS

NOTES

1. THE CONTRACTOR SHALL INSTALL A PROTECTIVE WRAP ON ALL INSTALLED BELOW GRADE PIPING WITH MATERIAL PROVIDED BY THE GUC.
2. ALL TAPS FOR WELDOLETS AND THREDOLETS SHALL BE FULL BORE.
3. SITE SHALL BE GRADED AS TO ALLOW FOR PROPER DRAINAGE AWAY FROM METER & REGULATOR STATION.

NORTH CAROLINA PROFESSIONAL SEAL 20388 ENGINEER MARTIN C. ROBBERS

4/19/15

SUMMARY OF MATERIALS

ITEM	QUANTITY	DESCRIPTION

NOTES

REVISIONS

REV.	DESIGN	DRAFT	CHECK	DESCRIPTION	DATE

APPROVAL

	PERMITS		BID		CONSTRUCTION	
	INITIALS	DATE	INITIALS	DATE	INITIALS	DATE
SURVEY						
C.P.						
DRAFTING & DESIGN – RK&K	CSY	5/20	CSY	6/19	–	–
ENGINEERING – RK&K	MCR	5/20	MCR	6/19	–	–

TEST DATA

TESTED FROM STATION: _____ TO STATION: _____

MEDIUM: _____ RECORD TEST PRESSURE: _____ psig

DATE TEST COMPLETED: _____

PROJECT

GCP89 – OLD RIVER ROAD DISTRICT REGULATOR STATION

ALIGNMENT SHEET

RK&K RUMMEL, KLEPPER & KAHL, LLP
2100 E. CARY ST. SUITE 309
RICHMOND, VIRGINIA 23223
T-804.782.1903 F-804.782.2142
ENGINEERS | CONSTRUCTION MANAGERS | PLANNERS | SCIENTISTS

RK&K COMM. NO. 1214-011-C

SCALE
PLAN AS SHOWN
PROFILE
HOR. –
VERT. –

Greenville Utilities

DISTRICT	COUNTY	STATE
–	PITT	NORTH CAROLINA

SHEET DESCRIPTION

PIPING SECTION AND DETAILS

SHEET: DR2-8

REVISION: 0

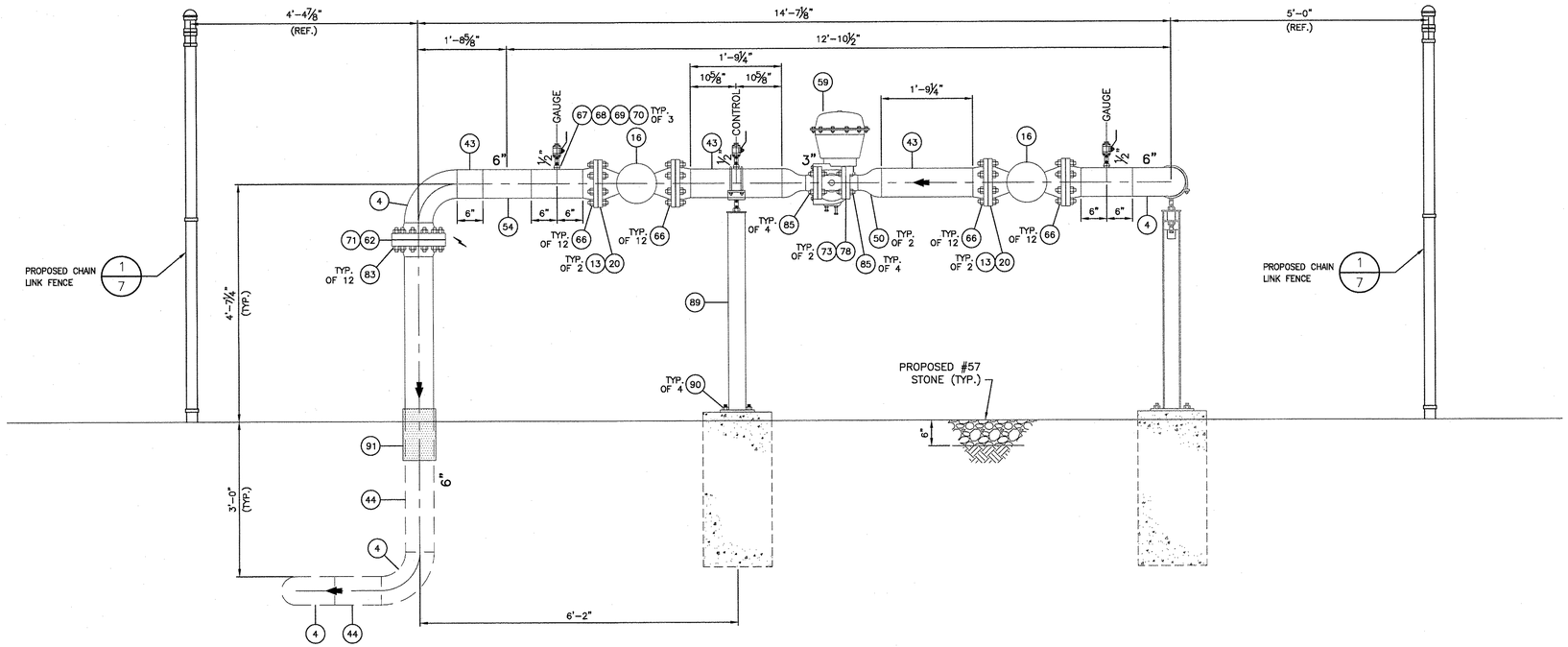

SECTION C

SCALE: 3/4" = 1'-0"

Issued for Bids

0' 6" 1' 2' 3'

SCALE: 3/4" = 1'-0"

(X) REFER TO SHEET 1 FOR BILL OF MATERIALS

NOTES

1. THE CONTRACTOR SHALL INSTALL A PROTECTIVE WRAP ON ALL INSTALLED BELOW GRADE PIPING WITH MATERIAL PROVIDED BY THE GUC.
2. ALL TAPS FOR WELDOLETS AND THREDOLETS SHALL BE FULL BORE.
3. SITE SHALL BE GRADED AS TO ALLOW FOR PROPER DRAINAGE AWAY FROM METER & REGULATOR STATION.

NORTH CAROLINA PROFESSIONAL SEAL 20388 ENGINEER MARTIN C. ROLOCKO 6/19/15

SUMMARY OF MATERIALS

ITEM	QUANTITY	DESCRIPTION

NOTES

REVISIONS

REV.	DESIGN	DRAFT	CHECK	DESCRIPTION	DATE

APPROVAL

	PERMITS		BID		CONSTRUCTION	
	INITIALS	DATE	INITIALS	DATE	INITIALS	DATE
SURVEY						
C.P.						
DRAFTING & DESIGN – RK&K	CSY	5/20	CSY	6/19	–	–
ENGINEERING – RK&K	MCR	5/20	MCR	6/19	–	–

TEST DATA

TESTED FROM STATION: _____ TO STATION: _____

MEDIUM: _____ RECORD TEST PRESSURE: _____ psig

DATE TEST COMPLETED: _____

PROJECT

GCP89 – OLD RIVER ROAD
DISTRICT REGULATOR STATION

ALIGNMENT SHEET

RK&K
RUMMEL, KLEPPER & KAHL, LLP
2100 E. CARY ST. SUITE 309
RICHMOND, VIRGINIA 23223
T-804.783.1903 F-804.782.2142
ENGINEERS | CONSTRUCTION MANAGERS | PLANNERS | SCIENTISTS

RK&K COMM. NO. 1214-011-C

SCALE
PLAN AS SHOWN
PROFILE
HOR. –
VERT. –

Greenville Utilities

DISTRICT	COUNTY	STATE
–	PITT	NORTH CAROLINA

SHEET DESCRIPTION

PIPING SECTION

SHEET: DR2-9

REVISION: 0