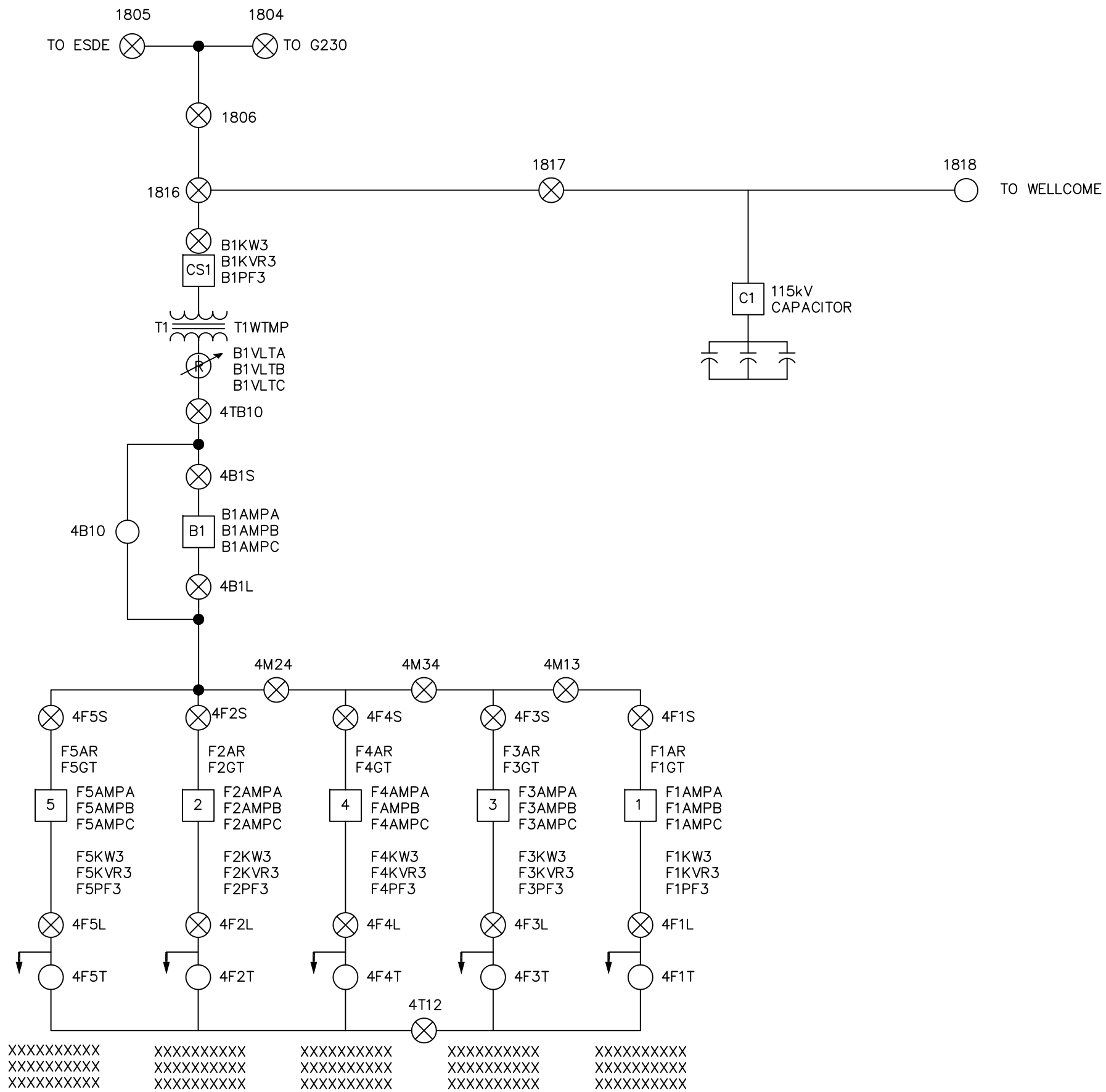

Greenville Utilities

GREENVILLE UTILITIES
Greenville, North Carolina

EASTERN BYPASS SUBSTATION
115 TO 15 kV
SCADA MASTER

DWN. KJK	DATE 06-17-11	DWG. NO.
CKD. JTR	APPD. JTR	
SCALE: NONE		

Eastern Bypass.wip.dwg 00